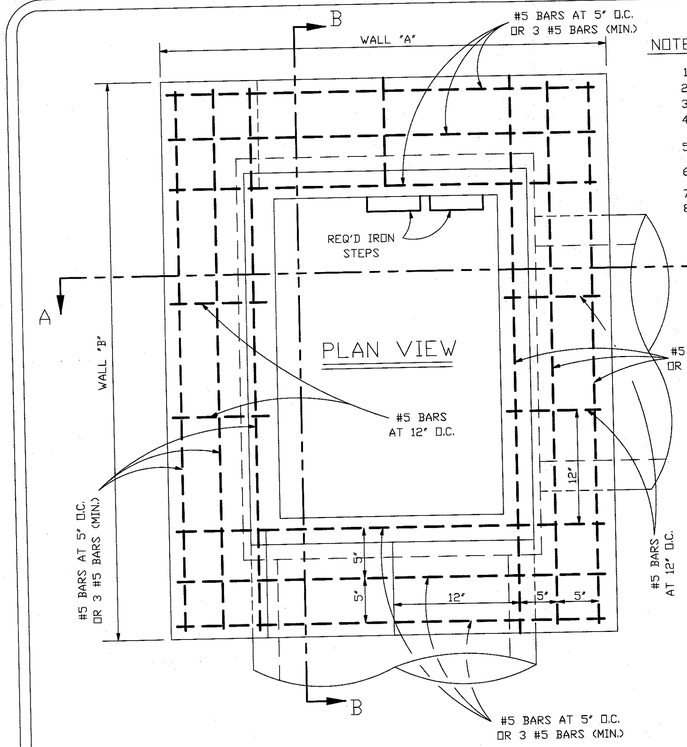

NOTES:

1. CULVERT SIZE SHOWN PERTAIN TO B & S PIPE. (UNLESS OTHERWISE SPECIFIED).
2. CONCRETE STRENGTH TO BE 3,000 PSI (MINIMUM) AT 28 DAYS.
3. DIMENSIONS FOR BOTTOM SLAB AS PER DIMENSIONS FOR WALLS "A" AND "B".
4. WHEN BOX IS 7'- 0" OR LESS IN HEIGHT, WALLS TO BE 8" THICK. WHEN BOX HEIGHT IS GREATER THAN 7'- 0" BUT LESS 12'- 0". SEE DETAIL "A".
5. WIDTH OF SHELL BEDDING SHALL BE AS PER DIMENSIONS SHOWN FOR WALLS "A" AND "B" PLUS 2'- 0".
6. ALL MASONARY TO BE LAID WITH RUNNING BOND AND HEADER COURSE (EVERY FOURTH LAYER).
7. ALL WALLS TO BE PLASTERED INSIDE AND OUTSIDE (1/2" MIN. THICKNESS).
8. ALL GRATES AND FRAMES SHALL BE EAST JORDAN, US FOUNDRY, BARRYCRAFT, NEENAH OR APPROVED EQUAL. ALL GRATES AND FRAMES SHALL BE CAST IRON TYPE AND WITHOUT PAINT.

⚠ NOTE:
ALL GREY CASTINGS FOR MANHOLES, AND CATCH BASINS OF ALL TYPES SHALL CONFORM TO THE REQUIRMENTS OF A.S.T.M. A-48, CLASS 30. AND SHALL BE FURNISHED WITHOUT PAINT (AASHTO#306-891)

NOTE:
SOLID COVERS ARE AVAILABLE ON REQUEST.

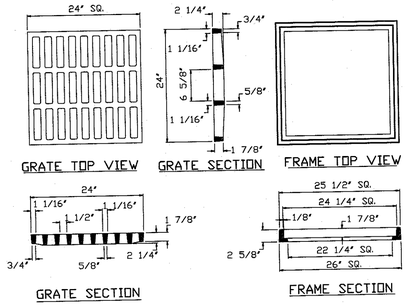

SQUARE D.I.

N.T.S.

SQUARE "GRATE" EAST JORDAN V-5724-1 OR US FOUNDRY USF 4618 FRAME & 6258 GRATE OR APPROVED EQUAL							
CULVERT SIZE	BOTTOM SLAB	TOP SLAB (A & B)	C & D	CULVERT SIZE	BOTTOM SLAB	TOP SLAB	C & D
12"DIA.	4'-2"X 4'-2"	3'-2"X 3'-2"	7 7/8"	21"DIA.X24"DIA.	5'-0"X 5'-0"	4'-6"X 4'-6"	15 7/8"
15"DIA.	4'-4"X 4'-4"	3'-4"X 3'-4"	8 7/8"	27"DIA.X30"DIA.	6'-0"X 6'-0"	5'-0"X 5'-0"	18 7/8"
18"DIA.	4'-6"X 4'-6"	3'-6"X 3'-6"	9 7/8"	36"DIA.	6'-6"X 6'-6"	5'-6"X 5'-6"	21 7/8"

RECTANGULAR "GRATE" EAST JORDAN V-5662 OR BARRYCRAFT B-1878-B6 W/GRATE OR APPROVED EQUAL				
CULVERT SIZE ON WALLS A & B	WALL "A"	" C "	WALL "B"	" D "
21"DIA.& 24"DIA. B& S	4'- 6"	15" (3 NO.5 BARS)	4'- 6"	15" (3 NO.5 BARS)
27"DIA.& 30"DIA. B& S	5'- 0"	18" (3 NO.5 BARS)	5'- 0"	15" (3 NO.5 BARS)
36"DIA. B& S	5'- 9"	22 1/2" (3 NO.5 BARS)	5'- 9"	19 1/2" (3 NO.5 BARS)
42"DIA. B& S	6'- 6"	27" (4 NO.5 BARS)	6'- 6"	24" (4 NO.5 BARS)
48"DIA. B& S	7'- 0"	30" (5 NO.5 BARS)	7'- 0"	27" (4 NO.5 BARS)
54"DIA. T& G	7'- 3"	31 1/2" (5 NO.5 BARS)	7'- 3"	28 1/2" (5 NO.5 BARS)
60"DIA. T& G	7'- 9"	35" (6 NO.5 BARS)	7'- 9"	32" (6 NO.5 BARS)
72"DIA. T& G	9'- 0"	42" (7 NO.5 BARS)	9'- 0"	39" (7 NO.5 BARS)

B & S = BELL & SPIGOT
T & G = TONGUE & GROOVE
W.I. = WROUGHT IRON

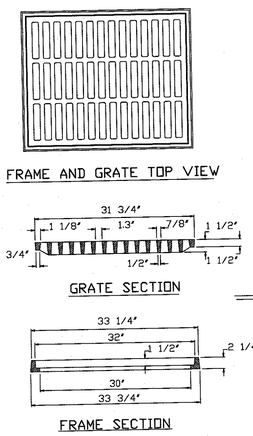

RECTANGULAR D.I.

N.T.S.

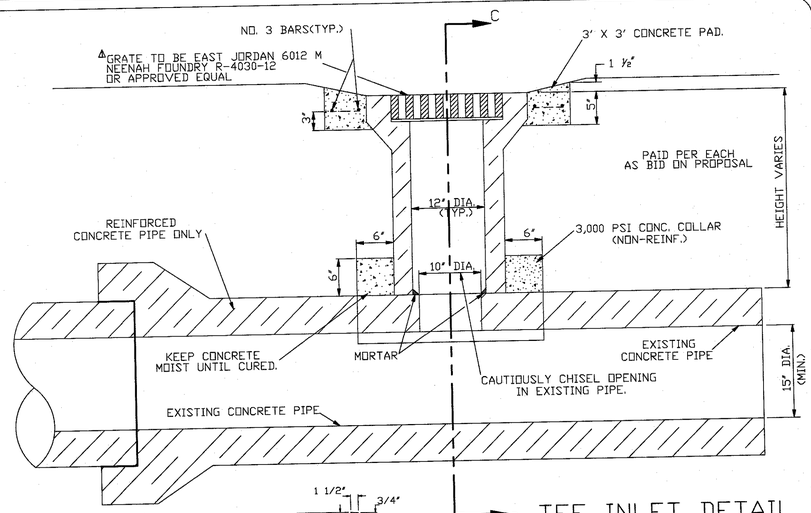

TEE INLET DETAIL

N.T.S.

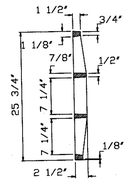

3'X 3' CONCRETE PAD

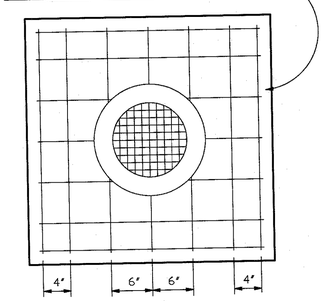

TOP VIEW

7 NO.3 BARS SPACED AS SHOWN (EACH WAY)

N.T.S.

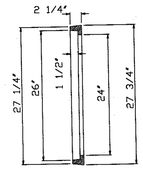

FRAME SECTION

ARCH PIPE (RISE X SPAN)	X (INCHES)	¼ X (INCHES)
13 ½" X 22"	2"	½"
15 ½" X 26"	2 ¼"	9/16"
18" X 28 7/8"	3"	¾"
22 9/16" X 36 ¼"	3 3/4"	15/16"
26 3/4" X 43 3/4"	3"	¾"
31 5/16" X 51 7/8"	3 ½"	⅞"
36" X 58 ½"	4 ½"	1 ⅛"
40 ¼" X 65"	5 ¼"	1 3/16"
45" X 73 ½"	5"	1 ¼"
54" X 88"	6"	1 ½"
62 5/8" X 102"	6 ⅛"	1 ½"
77 3/8" X 122"	7"	1 ¾"

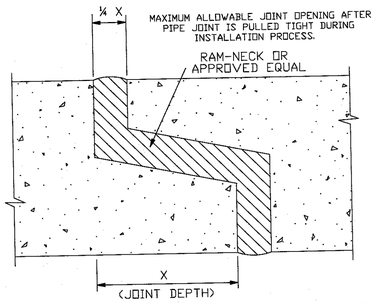

APPLICABLE TO TONGUE AND GROOVE PIPE

(ARCH PIPE ONLY)

N.T.S.

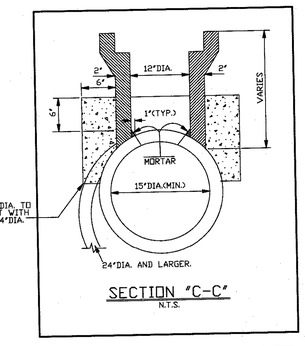

SECTION "C-C"

N.T.S.

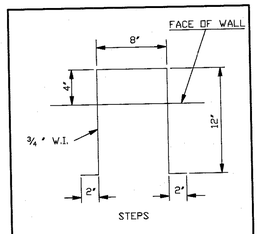

" DETAIL B "

N.T.S.

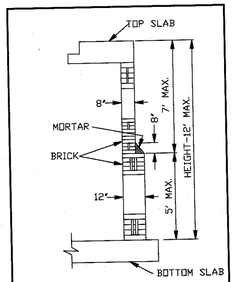

" DETAIL A "

N.T.S.

SECTION " A - A "

N.T.S.

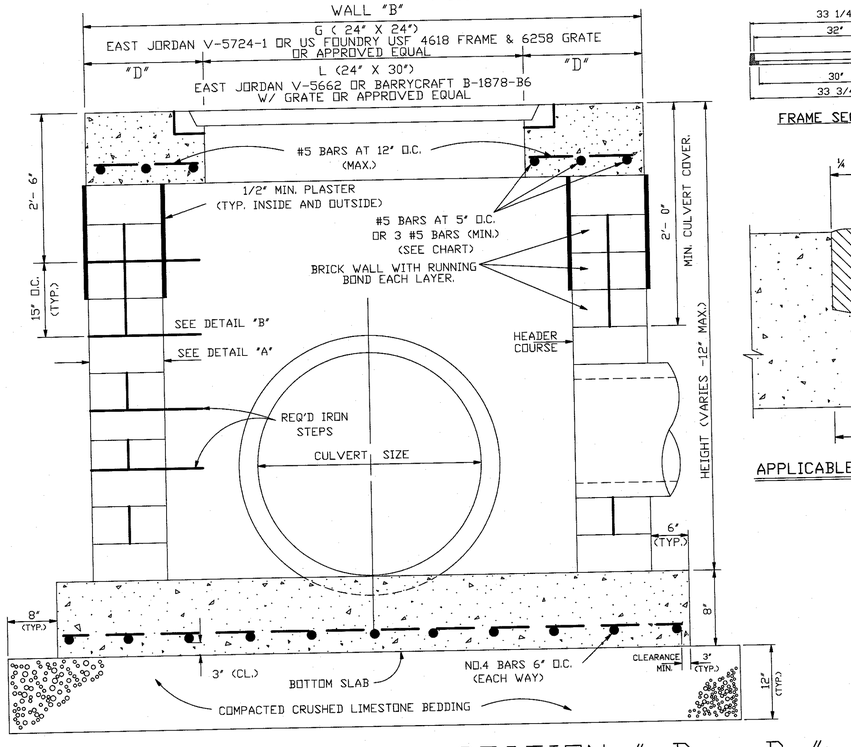

SECTION " B - B "

N.T.S.

DROP INLET DETAIL

JEFFERSON PARISH
DEPARTMENT OF ENGINEERING

DRAWING TITLE
DRAINAGE STANDARD DETAILS

DRAWN BY: H.J.W.	DATE: 08/07/92	REVISED BY: H.J.W.	DATE: 06/13/94		
REVISED BY: H.J.W.	DATE: 07/25/97	DWF TO AUTOCAD-LT: H.J.W.	DATE: 01/04/04		
REVISED BY: J.L.	DATE: 11/26/07	REVISED BY: –	DATE: –		
REVISED BY: C.J.	DATE: 07/11/13	REVISED BY: –	DATE: –		
XREFS: AUTOCAD LT. 2004		VIN: DRAIN3.DWG			
FILE NUMBER: 0025					

SHEET NO. 3 OF 3