NOTE: ALL GREY IRON CASTINGS FOR MANHOLES AND CATCH-BASINS OF ALL TYPES SHALL CONFORM TO THE REQUIREMENTS OF A.S.T.M. A-48, CLASS 30 AND SHALL BE FURNISHED WITHOUT PAINT. (M306-891) CASTING MUST BE OF DOMESTIC UNITED STATES MANUFACTURE ONLY.

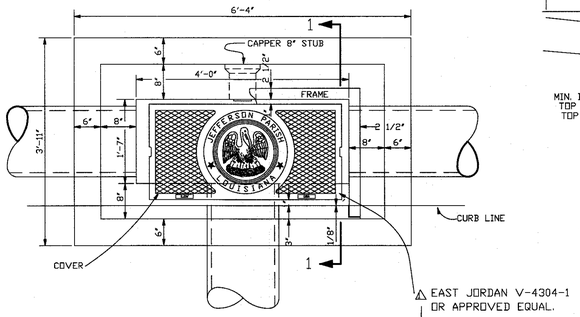

PLAN OF TYPE 1 CATCH BASIN

N.T.S.

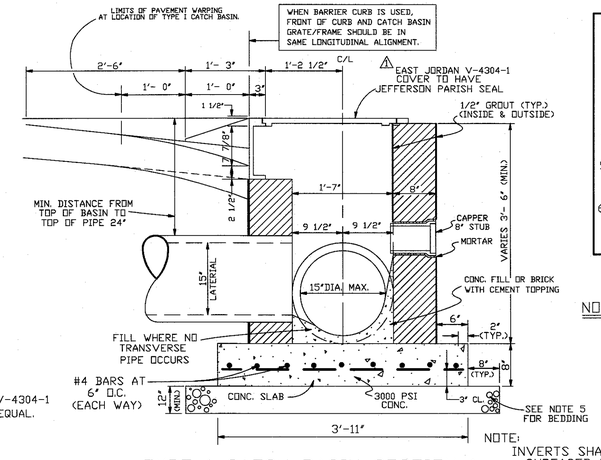

NOTE: INVERTS SHALL BE SURFACED WITH A MINIMUN OF 1/2" LAYER OF CEMENT MORTAR.

TYPE 1 CATCH BASIN SECTION 1

N.T.S.

NOTES

1-CONCRETE STRENGTH TO BE 3,000 PSI (MIN.) AT 28 DAYS.

2-WALL THICKNESS SHALL BE BASED UPON BASIN HEIGHT. REFER TO DETAIL "A" (SEE BELOW).

3-ALL MASONRY TO BE LAID WITH RUNNING BOND AND HEADER COURSE (EVERY FOURTH LAYER).

4-ALL WALLS TO BE PLASTERED 1/2" THICK INSIDE AND OUTSIDE.

5-12" THICK CRUSHED LIMESTONE BEDDING FOUNDATION SHALL BE REQUIRED UNDER MANHOLES AND CATCH BASINS.

6-ALL CATCH BASINS AND MANHOLES GREATER THAN 4'- 0" DEEP ARE REQUIRED TO HAVE IRON STEPS.

NOTE: STANDARD FOR DIMENSION "A" IS 24". WHEN DIMENSION "A" EXCEEDS 24" CASTING BECOMES PATTERN NO. V - 1406 AS MANUFACTURED BY EAST JORDAN OR USF 765 RING AND CJ COVER AS MANUFACTURED BY US FOUNDRY OR APPROVED EQUAL AND 8" REINFORCED CONCRETE SLAB IS REQUIRED AS CASTING SEAT.

DIMENSION "A"	REINFORCING	
	# SIZE	# EA. WAY
24" (STANDARD)	# 4	4
24" - 27"	# 5	4
27" - 30"	# 5	6
30" - 36"	# 5	8
36" - 48"	# 6	10

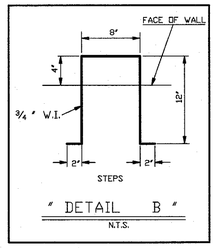

" DETAIL B "

N.T.S.

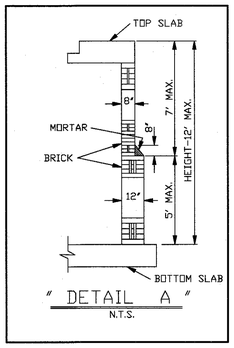

" DETAIL A "

N.T.S.

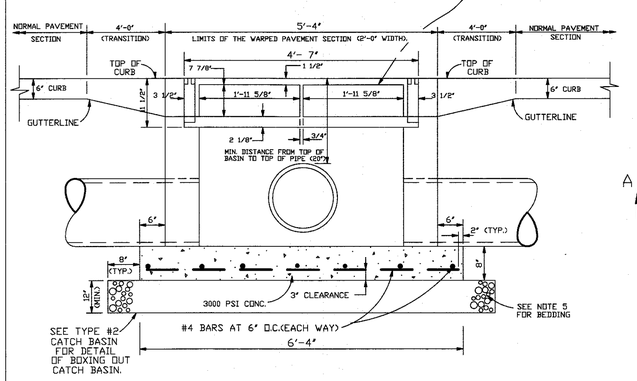

FRONT ELEVATION TYPE 1 CATCH BASIN

N.T.S.

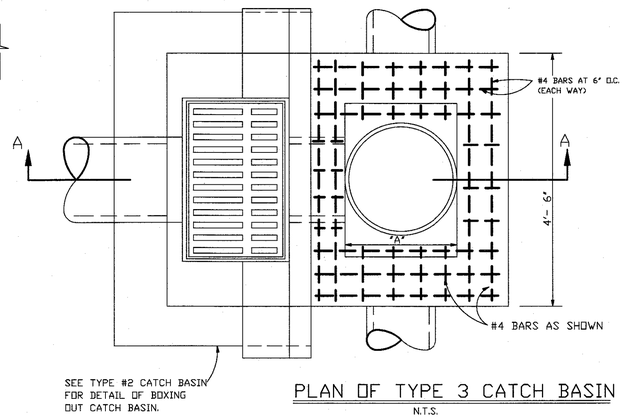

PLAN OF TYPE 3 CATCH BASIN

N.T.S.

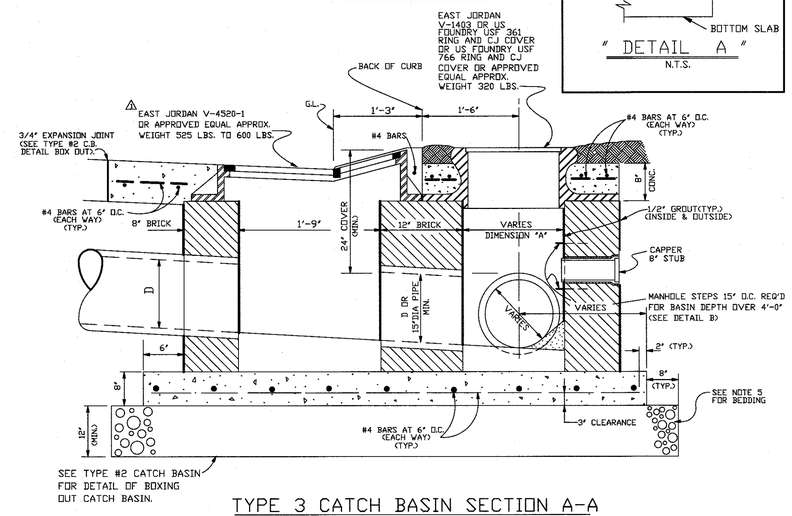

TYPE 3 CATCH BASIN SECTION A-A

N.T.S.

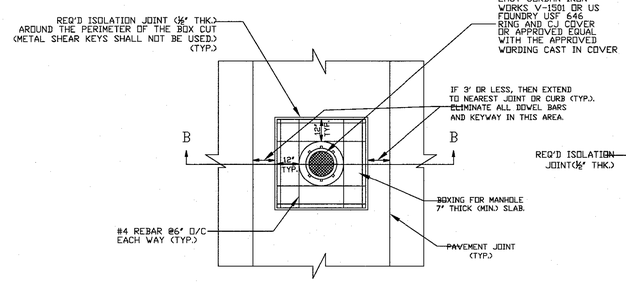

DETAIL FOR BOXING MANHOLE

N.T.S.

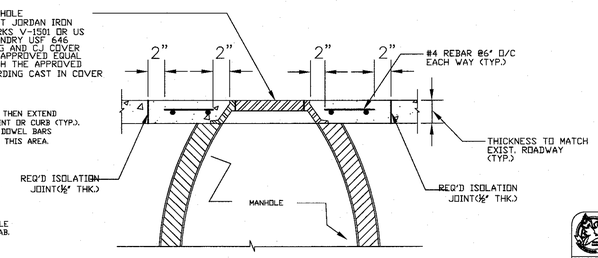

SECTION B-B

N.T.S.

REVISED BY:	DATE:	REVISED BY:	DATE:
C.J.	01/25/12		
C.J.	07/11/13		

JEFFERSON PARISH
DEPARTMENT OF ENGINEERING

DRAWN TITLE: DRAINAGE STANDARD DETAIL

DRAWN BY:	DATE:	REVISED BY:	DATE:
H.J.W.	03/12/91	H.J.W.	06/04/01
H.J.W.	07/24/01	H.J.W.	09/21/01
INP TO AUTOCAD-LT: H.J.W.	12/14/03	H.J.W.	07/26/05
J.L.	04/12/07	C.J.	09/07/11

HARD: AUTOCAD LT. 2004	W/IN: DRAIN2.DWG
FILE NUMBER: 0025A	

SHEET NO. 2 OF 3