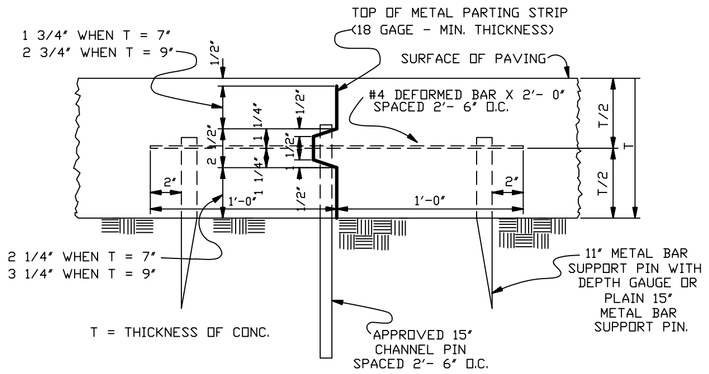

DEFORMED LONGITUDINAL JOINT

(ALSO CALLED METAL KEYED JOINT)
N.T.S.

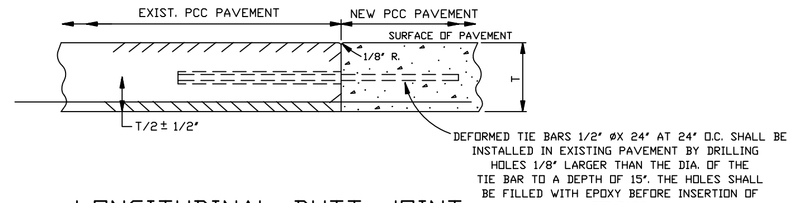

LONGITUDINAL BUTT JOINT

(APPLICABLE TO MAJOR STREETS)
N.T.S.

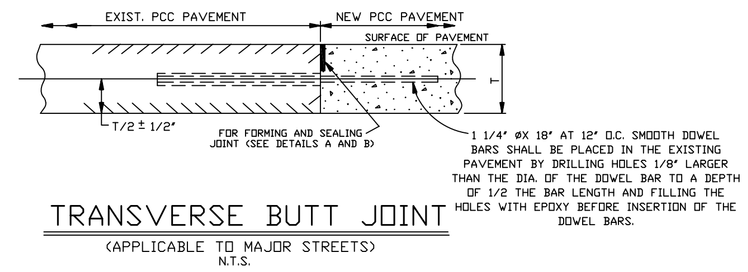

TRANSVERSE BUTT JOINT

(APPLICABLE TO MAJOR STREETS)
N.T.S.

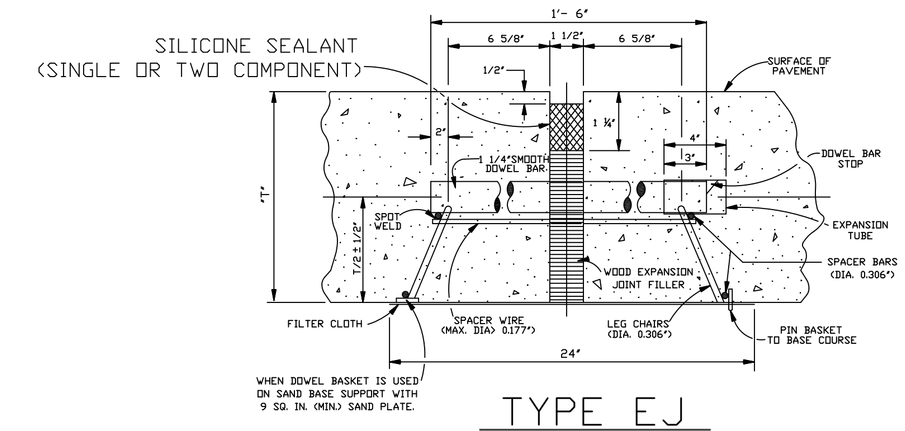

TYPE EJ

(TRANSVERSE EXPANSION JOINT)
(SECTION "A-A")
N.T.S.

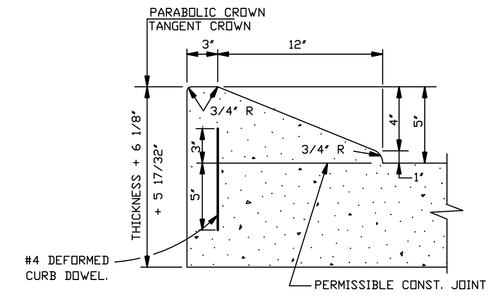

5" HIGH ROLLOVER TYPE CONCRETE CURB

(CONCRETE PAVEMENT ROADWAY)
N.T.S.

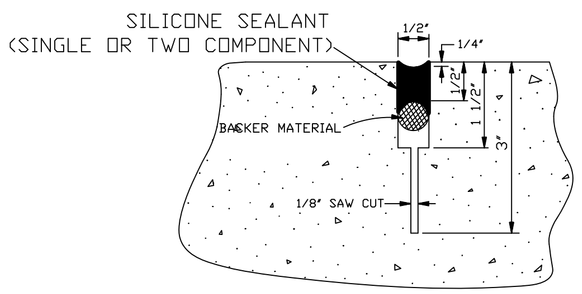

DETAIL "A"

N.T.S.

DETAILS "A" AND "B" ARE USED IN CONJUNCTION WITH TRANSVERSE DUMMY JOINT OR CONST. JOINT.

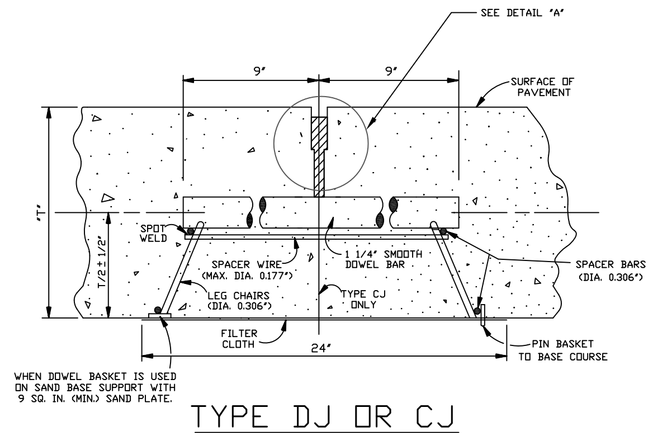

TYPE DJ OR CJ

(TRANSVERSE DUMMY JOINT
OR CONSTRUCTION JOINT)
(SECTION "B-B")
N.T.S.

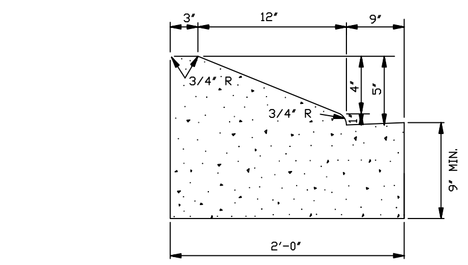

5" HIGH ROLLOVER TYPE CONCRETE CURB & GUTTER

(ASPHALT PAVEMENT ROADWAY)
N.T.S.

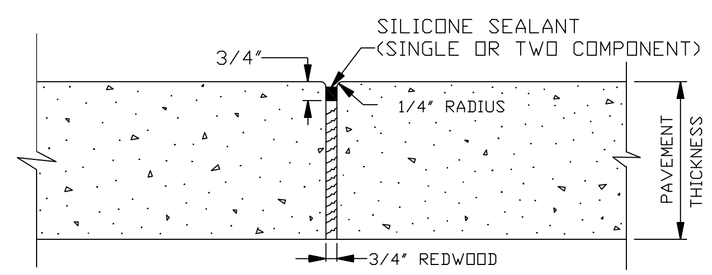

EXPANSION JOINT

(FOR CONCRETE SIDEWALK
& RAMP FOR HANDICAPPED)
N.T.S.

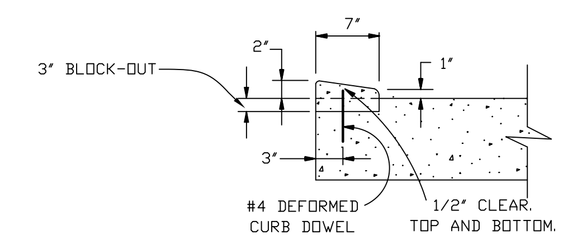

MODIFIED BARRIER CURB

N.T.S.

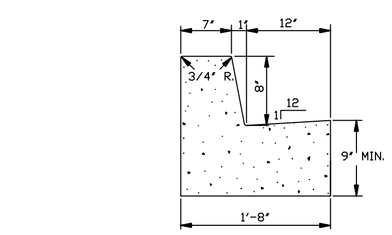

8" HIGH BARRIER TYPE CONCRETE CURB & GUTTER

(ASPHALT PAVEMENT ROADWAY)
N.T.S.

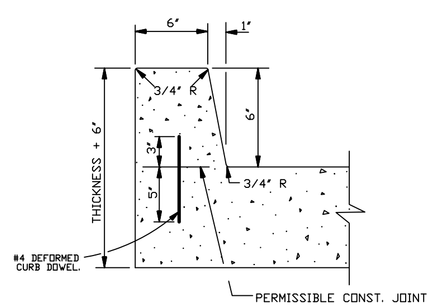

6" HIGH BARRIER TYPE CONCRETE CURB.

(CONCRETE PAVEMENT ROADWAY)
N.T.S.

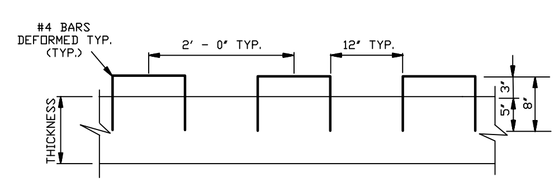

CURB DOWELS

N.T.S.

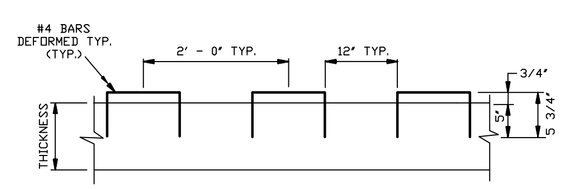

MODIFIED CURB DOWELS

(USED ON MODIFIED BARRIER CURB)
N.T.S.

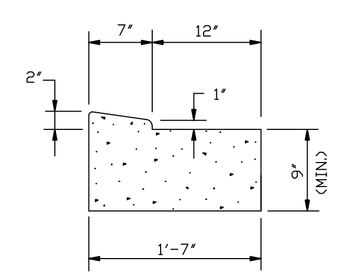

MODIFIED BARRIER CURB AND GUTTER

N.T.S.

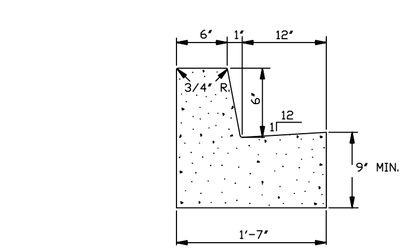

6" HIGH BARRIER TYPE CONCRETE CURB & GUTTER

(ASPHALT PAVEMENT ROADWAY)
N.T.S.

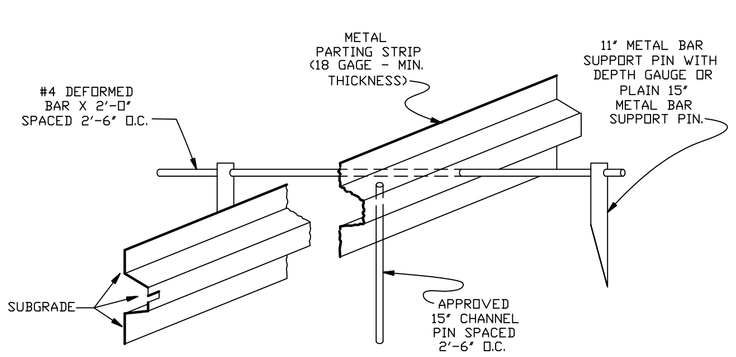

OBLIQUE VIEW METAL PARTING STRIP FOR DEFORMED LONGITUDINAL JOINT

N.T.S.

NOTE:
ALL JOINTS FOR CONCRETE PAVEMENT SHOWN IN LA. D.O.T.D. STANDARD PLANS CP-01 CAN BE USED AT THE REQUEST OF THE ENGINEER WHO SHALL PROVIDE CONSTRUCTION DETAILS TO CONTRACTOR.

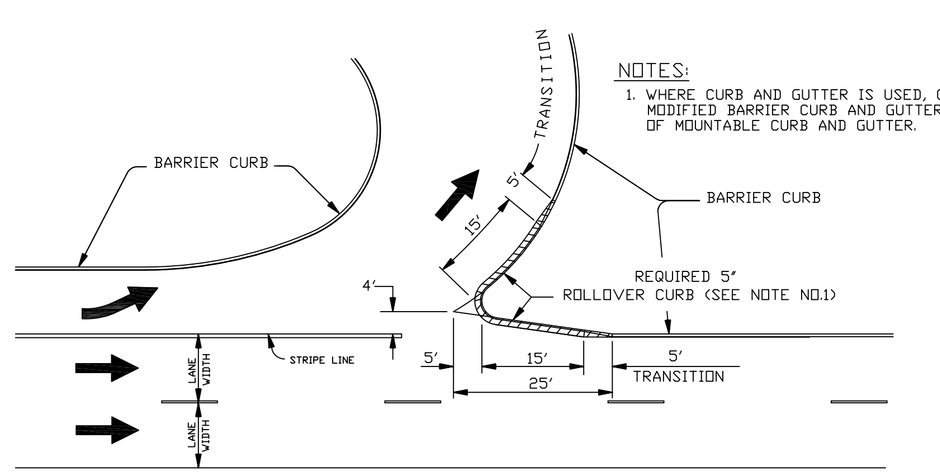

NOTES:

1. WHERE CURB AND GUTTER IS USED, CONSTRUCT MODIFIED BARRIER CURB AND GUTTER INSTEAD OF MOUNTABLE CURB AND GUTTER.

ROLLOVER CURB IN THE GORE AREA

(U-TURN, LEFT TURN LANE OR ROADWAY SPLIT)
N.T.S.

JEFFERSON PARISH
DEPARTMENT OF ENGINEERING

DRAWING TITLE: TYPICAL ROADWAY DETAILS

REVISED BY:	C.J.	DATE: 04/11/13	DRAWN BY:	W.V.N.	DATE: 03/12/91	REVISED BY:	H.J.W.	DATE: 08/18/00
REVISED BY:	C.J.	DATE: 09/24/15	REVISED BY:	P.D.	DATE: 10/13/00	REVISED BY:	H.J.W.	DATE: 01/30/01
REVISED BY:		DATE:	REVISED BY:	H.J.W.	DATE: 05/21/03	DWF TO AUTOCAD-LT:	H.J.W.	DATE: 08/14/03
REVISED BY:		DATE:	REVISED BY:	C.J.	DATE: 05/13/11	REVISED BY:	C.J.	DATE: 07/18/12
			XGDS:	AUTOCAD LT. 2004		WIN:	ROAD1.DWG	
			FILE NUMBER:	2925				

SHT 1 OF 2