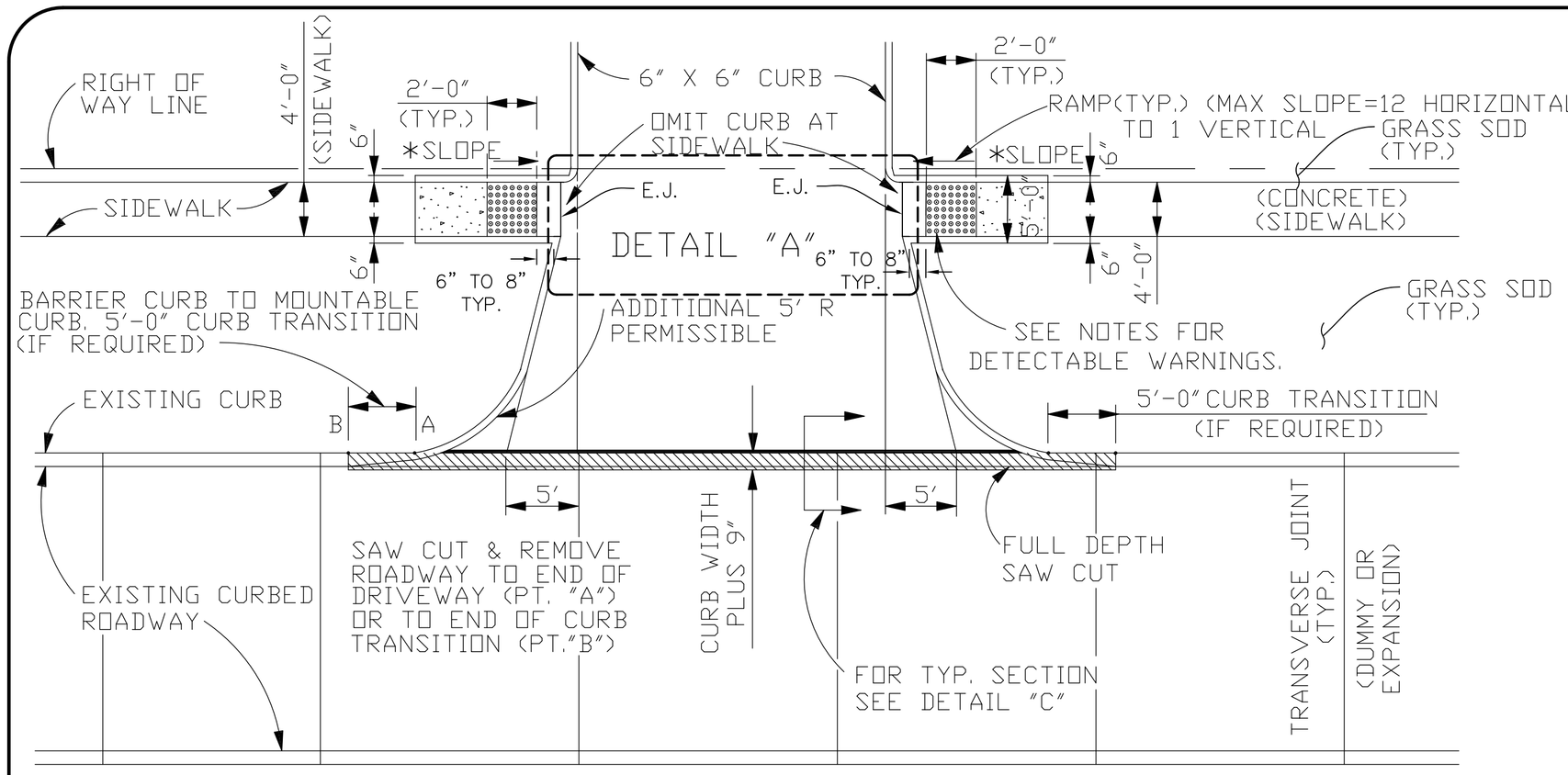

PLAN OF NEW CURBED DRIVEWAY CONNECTING TO CURBED ROADWAY

DETAIL "E"

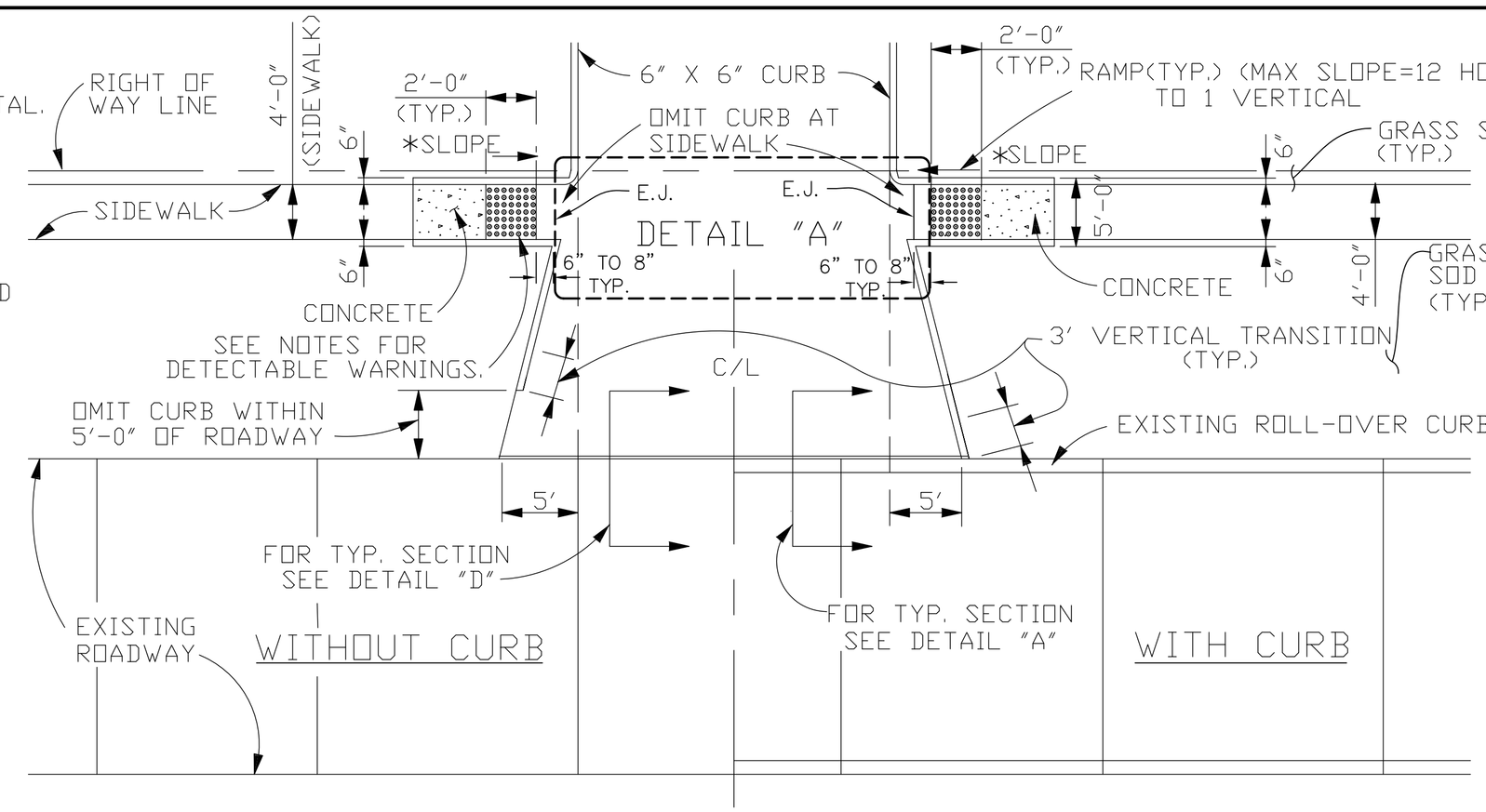

PLAN OF NEW CURBED DRIVEWAY CONNECTING TO ROADWAY WITH OR WITHOUT CURBS.

DETAIL "F"

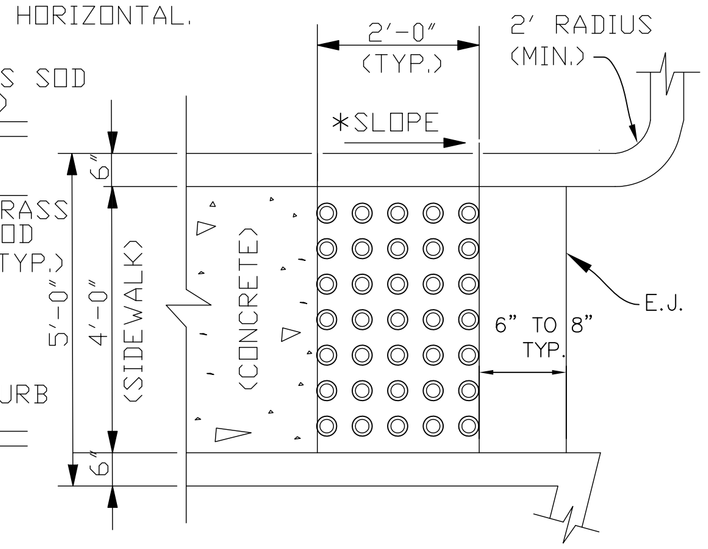

PARTICAL PLAN SHOWING 2'-0" OFFSET FOR TRUNCATED DOMES

N.T.S.

* MAXIMUM RAMP SLOPE

12 HORIZONTAL
1 VERTICAL

DRIVEWAY SPECIFICATIONS

ALL DRIVEWAYS BETWEEN STREET AND PROPERTY LINE TO BE CONSTRUCTED OF PORTLAND CEMENT CONCRETE, WITH A COMPRESSIVE STRENGTH OF 3,000 P.S.I. IN TWENTY-EIGHT (28) DAYS AND A MINIMUM THICKNESS OF EIGHT (8") INCHES.

(▲) THE TYPICAL STANDARD DRIVEWAY SLOPE IS 5.2% (⅝" PER FOOT). THE MAXIMUM ALLOWABLE SLOPE IS 7.5% (2⅝" PER FOOT). ANY DRIVEWAY SLOPE GREATER THAN THE TYPICAL STANDARD SLOPE OF 5.2% (⅝" PER FOOT) MUST BE APPROVED IN WRITING BY MR. ERROL MARTIN, JR., ENGINEERING DIVISION SUPERVISOR. AT 504-736-6793 PRIOR TO CONSTRUCTION.

(◉) DRIVEWAYS MUST BE DESIGNED AND CONSTRUCTED TO PROVIDE FOR A MAXIMUM LONGITUDINAL SIDEWALK SLOPE OF 8.33% (1" PER FOOT), WHICH INCLUDES THE LONGITUDINAL TRANSITION FROM NEW SIDEWALK TO EXISTING SIDEWALK LOCATED AT THE ADJACENT PROPERTY LINE.

NOTES:

1. TRUNCATED DOMES IN A DETECTABLE WARNING SURFACE SHALL HAVE A BASE DIAMETER OF 0.9 INCHES (23 mm) MINIMUM TO 1.4 INCHES (36 mm) MAXIMUM, A TOP DIAMETER OF 50% OF THE BASE DIAMETER MINIMUM TO 65% OF THE BASE DIAMETER MAXIMUM, AND A HEIGHT OF 0.2 INCHES (5 mm).
2. TRUNCATED DOMES IN A DETECTABLE WARNING SURFACE SHALL HAVE A CENTER-TO-CENTER SPACING OF 1.6 INCHES (41 mm) MINIMUM AND 2.4 INCHES (61 mm) MAXIMUM, AND A BASE-TO-BASE SPACING OF 0.65 INCHES (16 mm) MINIMUM, MEASURED BETWEEN THE MOST ADJACENT DOMES ON SQUARE GRID.
3. TRUNCATED DOMES SURFACES SHALL CONTRAST VISUALLY WITH ADJACENT WALKING SURFACES EITHER LIGHT-ON-DARK, OR DARK ON LIGHT.
4. THE MATERIAL USED TO PROVIDE CONTRAST SHALL BE AN INTEGRAL PART OF THE WALKING SURFACE. DETECTABLE WARNINGS USED ON INTERIOR SURFACES SHALL DIFFER FROM ADJOINING WALKING SURFACES IN RESILIENCY OR SOUND-ON-CANE CONTACT.
5. TRUNCATED DOMES ON CURB RAMPS WITHIN THE STREET R.O.W. SHALL BE CAST-IN PLACE. PREFABRICATED DETECTABLE WARNING UNITS INSTALLED DIRECTLY IN WET CONCRETE. SURFACE APPLIED OR SURFACE MOUNTED SYSTEMS WITH MECHANICAL OR ADHESIVE ANCHORAGE ARE NOT ACCEPTABLE.
6. TRUNCATED DOMES SHALL COVER AT LEAST 2 FEET IN DEPTH AND EXTEND FULL WIDTH OF THE RAMP. ANY RAMP HAVING FLARED SIDES WILL NOT BE REQUIRED TO HAVE THESE DETECTABLE WARNINGS ON THE FLARES.
7. THE LIMITS OF THE MAIN SURFACE OF THE RAMP ON WHICH THE DETECTABLE WARNINGS ARE PLACED SHALL HAVE A REDDISH COLOR SIMILAR TO THAT OF "TERRA COTTA". THE COLOR MUST BE APPROVED BY JEFFERSON PARISH DEPARTMENT OF ENGINEERING.
8. STAMPING OF TRUNCATED DOMES WITHIN THE R.O.W. WILL NOT BE ALLOWED.

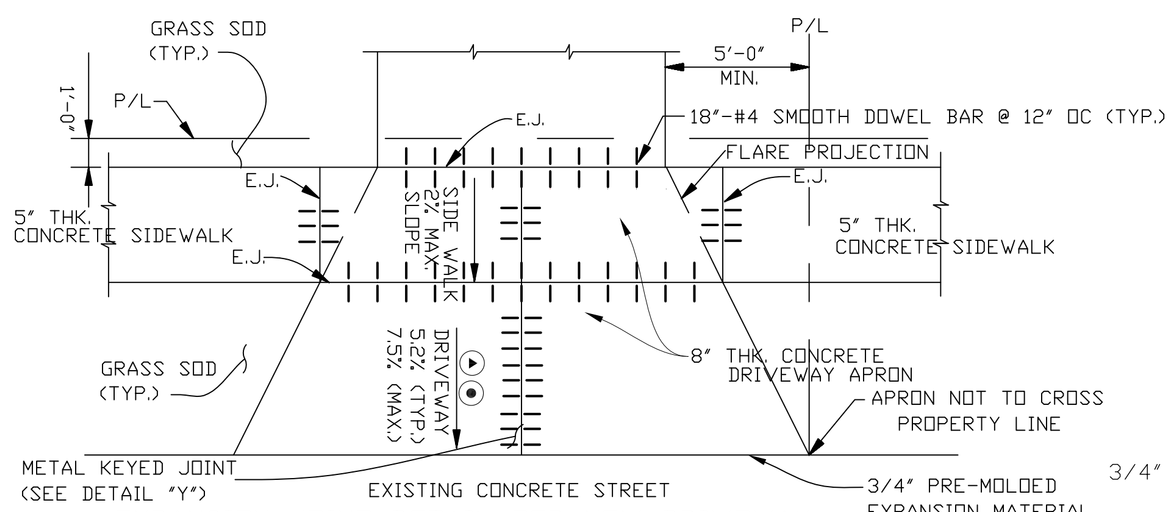

EXPANSION JOINT DETAIL FOR NEW DRIVEWAY

DETAIL "A"

N.T.S.

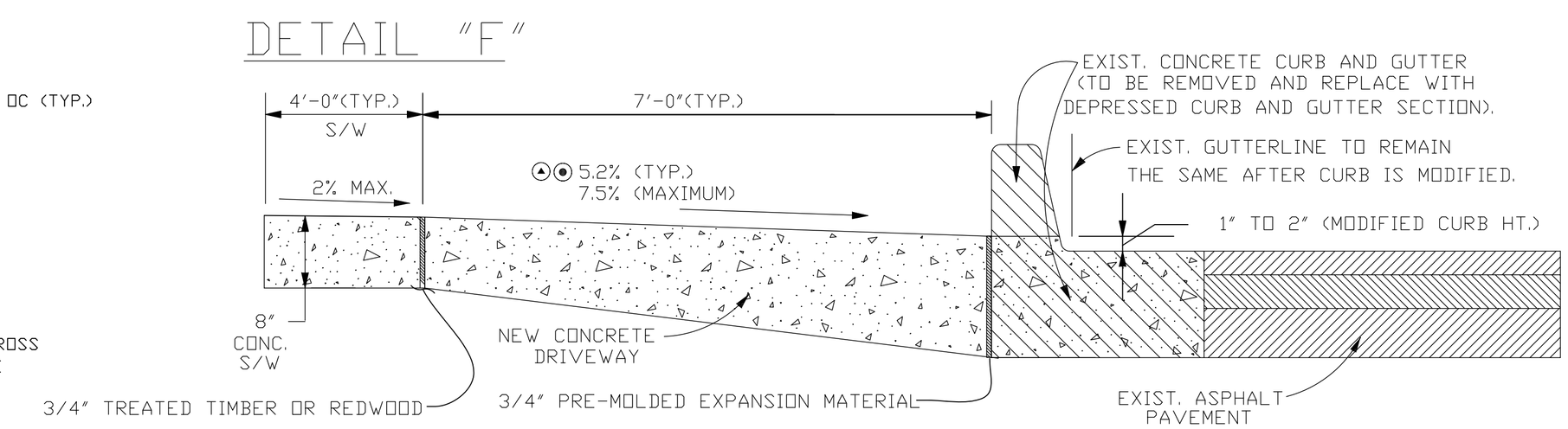

NEW DRIVEWAY CONNECTION TO EXISTING ASPHALT ROADWAY WITH CURB AND GUTTER

SCALE: N.T.S.

DETAIL "G"

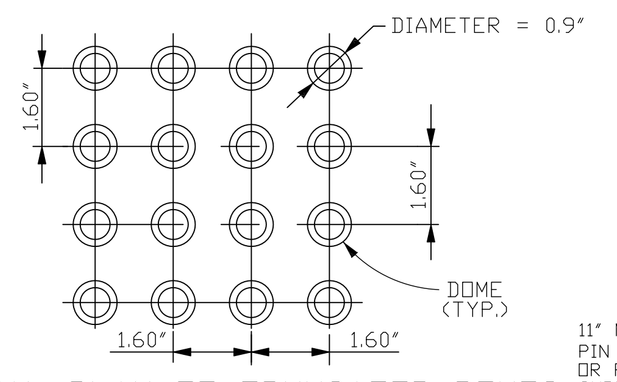

PARTIAL PLAN OF TRUNCATED DOMES

(ADAAG DETECTABLE WARNINGS ON WALKING SURFACES 05/06/02)

N.T.S.

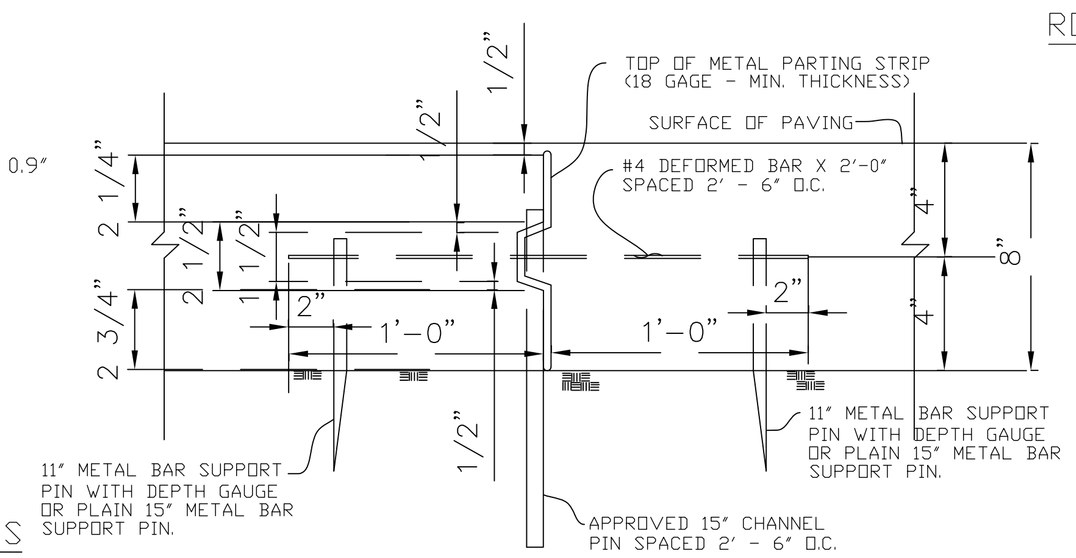

DETAIL "Y"

N.T.S.

NOTE:

FOR PRE-POUR INSPECTION CALL THE DEPARTMENT OF ENGINEERING AT 736-6793 FOR APPOINTMENT.

COMMERCIAL PLAN OF DETAIL NO. 2

JEFFERSON PARISH
DEPARTMENT OF ENGINEERING

DRAWING TITLE
STANDARD DETAILS FOR CONNECTING DRIVEWAYS TO EXISTING ROADWAYS

DRAWN BY:	C.J.	DATE: 07/06/10	DRAWN BY:	T.V.C.	DATE: 08/03/93	REVISED BY: H.J.W.	DATE: 03/31/00
REVISED BY:	C.J.	DATE: 10/08/10	REVISED BY:	H.J.W.	DATE: 07/26/02	DXF TO AUTOCAD-LT: H.J.W.	DATE: 02/14/05
REVISED BY:	C.J.	DATE: 05/26/11	REVISED BY:	H.J.W.	DATE: 02/16/05	REVISED BY: H.J.W.	DATE: 06/22/05
REVISED BY:	C.J.	DATE: 09/24/15	REVISED BY:	J.L.	DATE: 06/01/07	REVISED BY: C.H.S.	DATE: 01/21/09
REVISED BY:	J.W.	DATE: 12/08/15	XGDS:	AUTOCAD 2012/LT.		WIN: DETAIL-2.DWG	
			FILE NUMBER:	ENV-09			

SCALE: N.T.S.