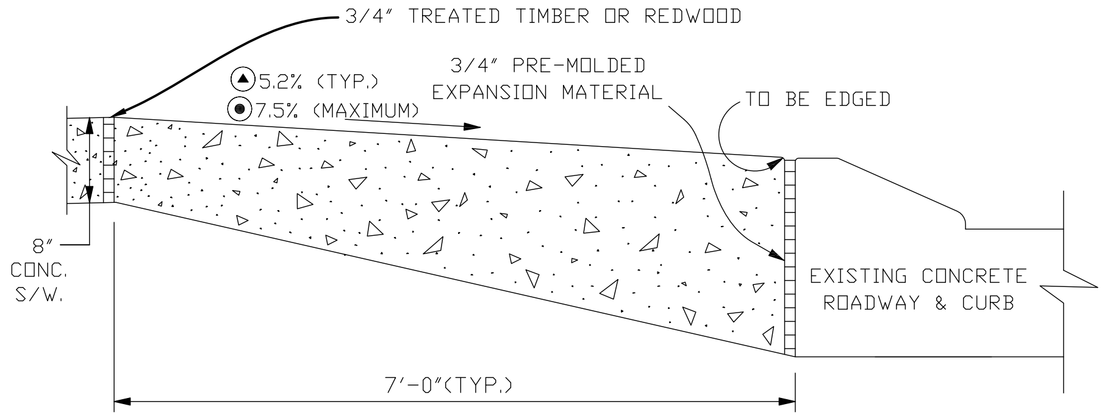

NEW DRIVEWAY CONNECTION TO EXISTING CONCRETE ROADWAY WITH ROLLOVER CURB (CURB TO REMAIN)
(NOT APPLICABLE TO MAJOR STREETS WHERE EXISTING CURB HEIGHT EXCEEDS 3")

DETAIL "A"

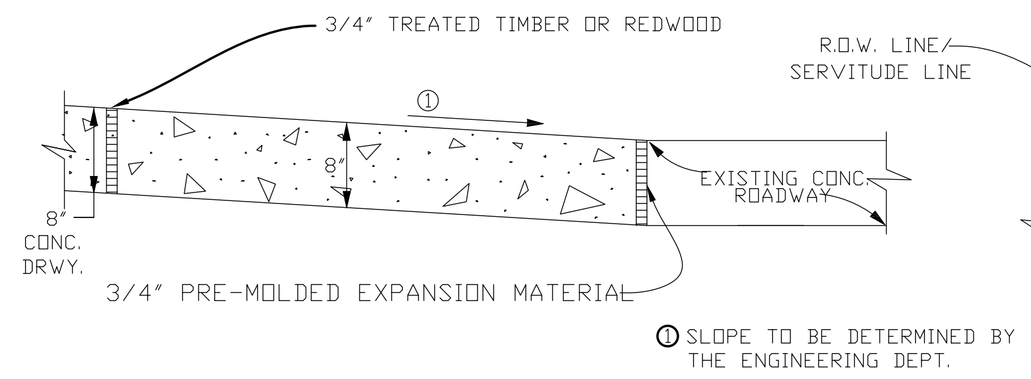

NEW DRIVEWAY CONNECTION TO EXISTING CONCRETE ROADWAY WITHOUT CURB

DETAIL "D"

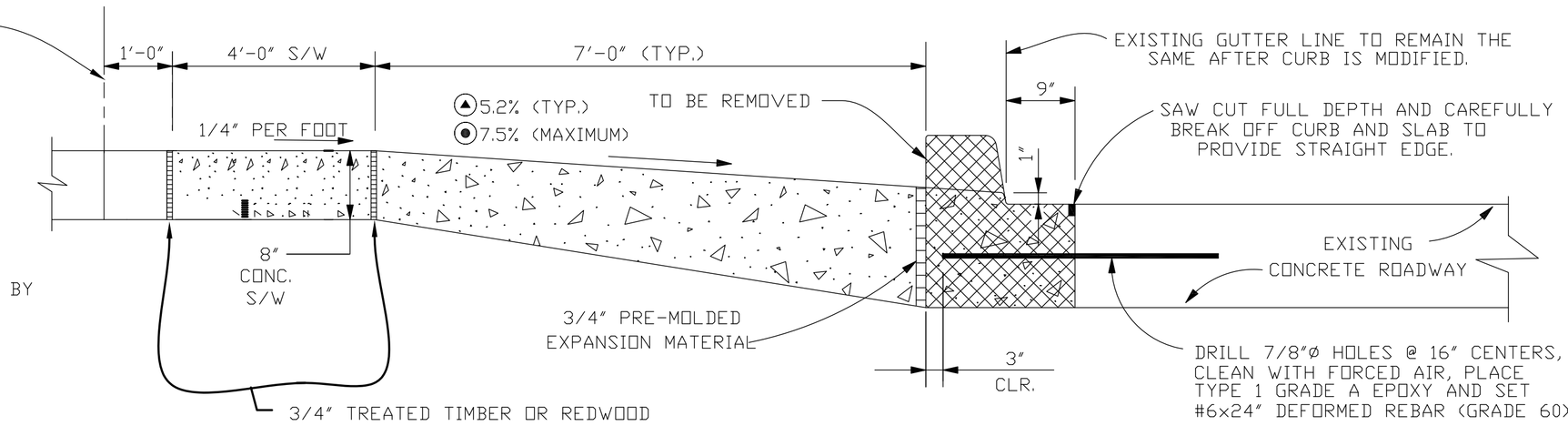

NEW DRIVEWAY CONNECTION TO EXISTING CONCRETE ROADWAY WITH BARRIER CURB (CURB TO BE REMOVED & REPLACED WITH MODIFIED ROLLOVER CURB)

DETAIL "B"

DRIVEWAY SPECIFICATIONS

ALL DRIVEWAYS BETWEEN STREET AND PROPERTY LINE TO BE CONSTRUCTED OF PORTLAND CEMENT CONCRETE WITH A COMPRESSIVE STRENGTH 3000 P.S.I. IN TWENTY-EIGHT (28) DAYS AND A MINIMUM THICKNESS OF EIGHT (8) INCHES.

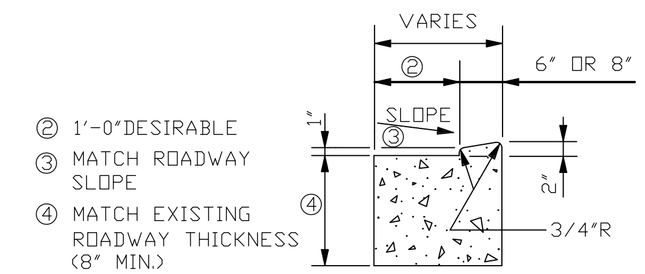

MODIFIED (DEPRESS) BARRIER CURB & GUTTER

(DRAINAGE TO CURB SHOWN) TO BE USED ON DRIVEWAYS & OTHER AREAS WHICH REQUIRE THE DEPRESSION OF A BARRIER CURB

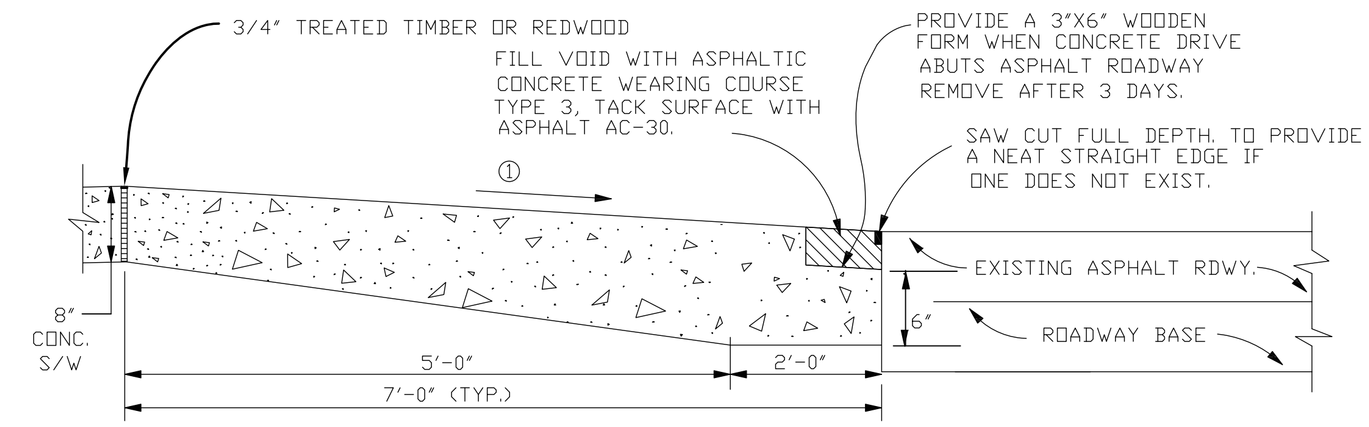

① SLOPE TO BE DETERMINED BY THE ENGINEERING DEPT.

NEW DRIVEWAY CONNECTION TO EXISTING ASPHALT ROADWAY WITHOUT CURB.

DETAIL "D-D"

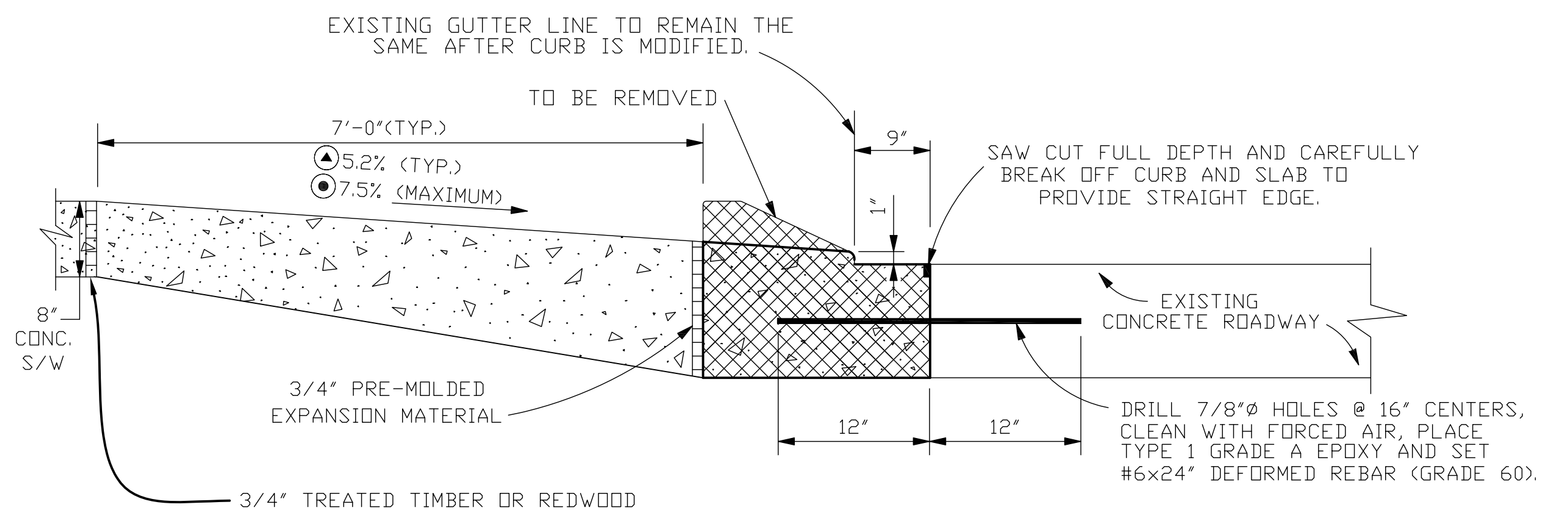

NEW DRIVEWAY CONNECTION TO EXISTING CONCRETE ROADWAY WITH ROLLOVER CURB (CURB TO BE REMOVED & REPLACED WITH MODIFIED ROLLOVER CURB)
(TO BE USED ON ALL MAJOR STREETS WHERE EXISTING ROLLOVER CURB HEIGHTS EXCEEDS 3")

DETAIL "C"

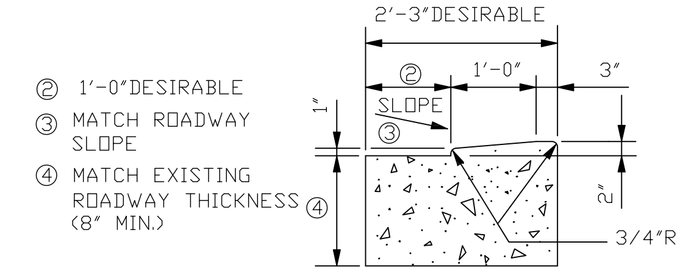

MODIFIED (DEPRESS) MOUNTABLE CURB & GUTTER (PARISH STANDARD)

(DRAINAGE TO CURB SHOWN) TO BE USED ON DRIVEWAYS & OTHER AREAS WHICH REQUIRE THE DEPRESSION OF A BARRIER CURB

COMMERCIAL PLAN OF DETAIL NO. 1

SCALE: N.T.S.

NOTE:
FOR PRE-POUR INSPECTION CALL THE DEPARTMENT OF ENGINEERING AT 736-6793 FOR APPOINTMENT.

▲ THE TYPICAL STANDARD DRIVEWAY SLOPE IS 5.2% (5/8" PER FOOT). THE MAXIMUM ALLOWABLE SLOPE IS 7.5% (29/32" PER FOOT). ANY DRIVEWAY SLOPE GREATER THAN THE TYPICAL STANDARD SLOPE OF 5.2% (5/8" PER FOOT) MUST BE APPROVED IN WRITING BY MR. ERROL MARTIN, JR., ENGINEERING DIVISION SUPERVISOR. AT 504-736-6793 PRIOR TO CONSTRUCTION.

◉ DRIVEWAYS MUST BE DESIGNED AND CONSTRUCTED TO PROVIDE FOR A MAXIMUM LONGITUDINAL SIDEWALK SLOPE OF 8.33% (1" PER FOOT), WHICH INCLUDES THE LONGITUDINAL TRANSITION FROM NEW SIDEWALK TO EXISTING SIDEWALK LOCATED AT THE ADJACENT PROPERTY LINE.

JEFFERSON PARISH
DEPARTMENT OF ENGINEERING

DRAWING TITLE: STANDARD DETAILS FOR CONNECTING DRIVEWAYS TO EXISTING ROADWAYS

REVISED BY:	C.J.	DATE: 09-24-2015	DRAWN BY:	T.V.C.	DATE: 08/03/93	REVISED BY: H.J.W.	DATE: 01/06/00
REVISED BY:	J.W.	DATE: 12-8-2015	DXF TO AUTOCAD-LT:	H.J.W.	DATE: 02/14/05	REVISED BY: H.J.W.	DATE: 06/22/05
REVISED BY:		DATE:	REVISED BY:	C.H.S.	DATE: 01/16/09	REVISED BY: C.H.S.	DATE: 06/03/09
REVISED BY:		DATE:	REVISED BY:	C.J.	DATE: 07-6-2010	REVISED BY: C.J.	DATE: 05/13/11
			XGDS:	AUTOCAD. 2012		WIN: DETAIL-1.DWG	
			FILE NUMBER:	ENV-09			