LEGEND
GRASS -

NOTE:

ALL PARKING LOTS MUST BE SHOWN AS CONCRETE OR ASPHALT SURFACE.

NOTE:

1. TRUNCATED DOMES IN A DETECTABLE WARNING SURFACE SHALL HAVE A BASE DIAMETER OF 0.9 INCHES (23 mm) MINIMUM TO 1.4 INCHES (36 mm) MAXIMUM, A TOP DIAMETER OF 50% OF THE BASE DIAMETER MINIMUM TO 65% OF THE BASE DIAMETER MAXIMUM, AND A HEIGHT OF 0.2 INCHES (5 mm).
2. TRUNCATED DOMES IN A DETECTABLE WARNING SURFACE SHALL HAVE A CENTER-TO-CENTER SPACING OF 1.6 INCHES (41 mm) MINIMUM AND 2.4 INCHES (61mm) MAXIMUM, AND A BASE-TO-BASE SPACING OF 0.65 INCHES (16 mm) MINIMUM, MEASURED BETWEEN THE MOST ADJACENT DOMES ON SQUARE GRID.
3. TRUNCATED DOMES SURFACES SHALL CONTRAST VISUALLY WITH ADJACENT WALKING SURFACES EITHER LIGHT-ON-DARK OR DARK-ON-LIGHT.
4. THE MATERIAL USED TO PROVIDE CONTRAST SHALL BE AN INTEGRAL PART OF THE WALKING SURFACE. DETECTABLE WARNINGS USED ON INTERIOR SURFACES SHALL DIFFER FROM ADJOINING WALKING SURFACES IN RESILIENCY OR SOUND-ON-CANE CONTACT.
5. TRUNCATED DOMES ON CURB RAMPS WITHIN THE STREET R.O.W. SHALL BE CAST-IN- PLACE. PREFABRICATED DETECTABLE WARNING UNITS INSTALLED DIRECTLY IN WET CONCRETE. SURFACE APPLIED OR SURFACE MOUNTED SYSTEMS WITH MECHANICAL OR ADHESIVE ANCHORAGE ARE NOT ACCEPTABLE.
6. TRUNCATED DOMES SHALL COVER AT LEAST 2 FEET IN DEPTH AND EXTEND FULL WIDTH OF THE RAMP. ANY RAMP HAVING FLARED SIDES WILL NOT BE REQUIRED TO HAVE DETECTABLE WARNINGS ON THE FLAIRS.
7. THE LIMITS OF THE MAIN SURFACE OF THE RAMP ON WHICH THE DETECTABLE WARNINGS ARE PLACED SHALL HAVE A REDDISH COLOR SIMILAR TO THAT OF "TERRA COTTA". THE COLOR MUST BE APPROVED BY JEFFERSON PARISH DEPARTMENT OF ENGINEERING.
8. STAMPING OF TRUNCATED DOMES WITHIN THE R.O.W. WILL NOT BE ALOOWED.

(▲) THE TYPICAL STANDARD DRIVEWAY SLOPE IS 5.2% (5/8" PER FOOT). THE MAXIMUM ALLOWABLE SLOPE IS 7.5% (2 9/32" PER FOOT). ANY DRIVEWAY SLOPE GREATER THAN THE TYPICAL STANDARD SLOPE OF 5.2% (5/8" PER FOOT) MUST BE APPROVED IN WRITING BY MR. ERROL MARTIN, JR., ENGINEERING DIVISION SUPERVISOR. AT 504-736-6793 PRIOR TO CONSTRUCTION.

(●) DRIVEWAYS MUST BE DESIGNED AND CONSTRUCTED TO PROVIDE FOR A MAXIMUM LONGITUDINAL SIDEWALK SLOPE OF 8.33% (1" PER FOOT), WHICH INCLUDES THE LONGITUDINAL TRANSITION FROM NEW SIDEWALK TO EXISTING SIDEWALK LOCATED AT THE ADJACENT PROPERTY LINE.

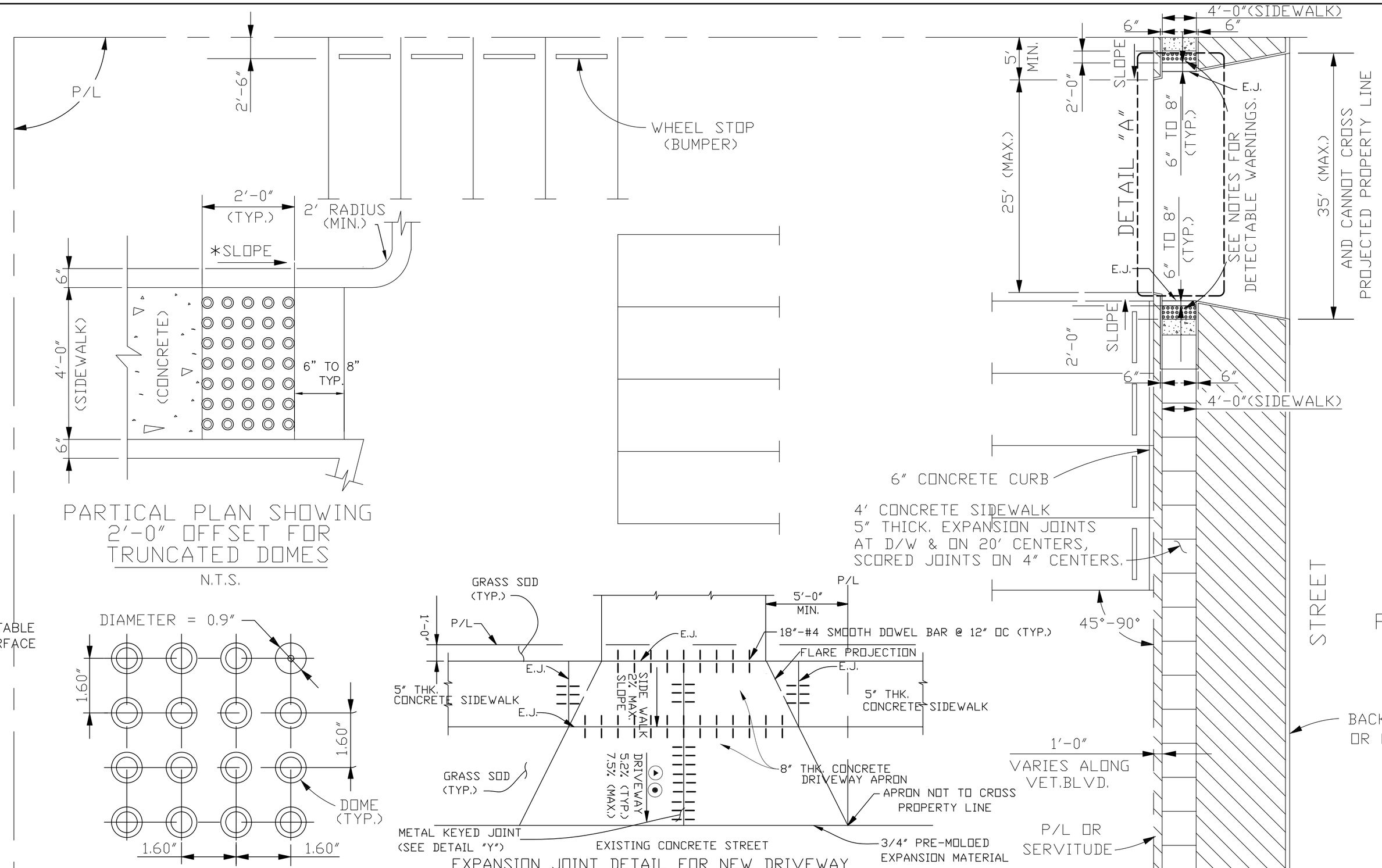

PARTICAL PLAN SHOWING 2'-0" OFFSET FOR TRUNCATED DOMES

N.T.S.

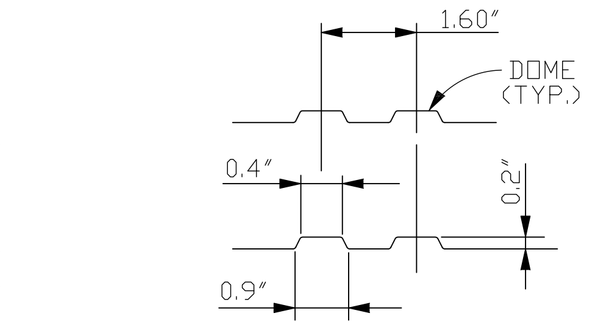

SECTION THRU TRUNCATED DOMES

(ADAAG DETECTABLE WARNINGS ON WALKING SURFACES 05/06/02)

N.T.S.

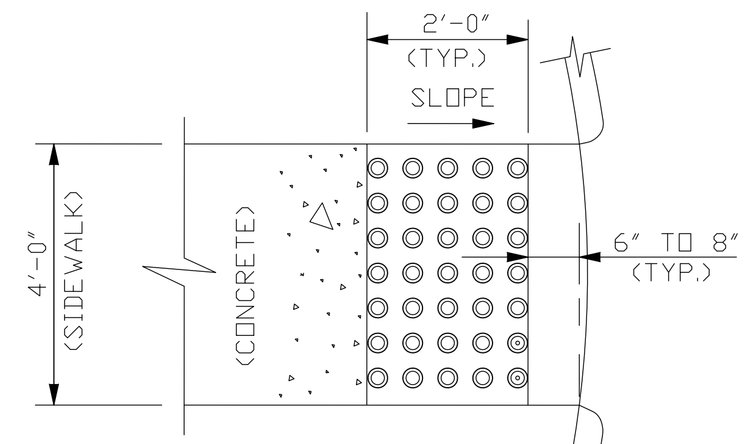

PARTICAL PLAN SHOWING 2'-0" OFFSET FOR TRUNCATED DOMES

N.T.S.

PARTIAL PLAN OF TRUNCATED DOMES

(ADAAG DETECTABLE WARNINGS ON WALKING SURFACES 05/06/02)

N.T.S.

EXPANSION JOINT DETAIL FOR NEW DRIVEWAY

DETAIL "A"

N.T.S.

NOTE:

FOR PRE-POUR INSPECTION CALL THE DEPARTMENT OF ENGINEERING AT 736-6793 FOR APPOINTMENT.

COMMERCIAL PLAN OF DETAIL NO. 4

NOT TO SCALE

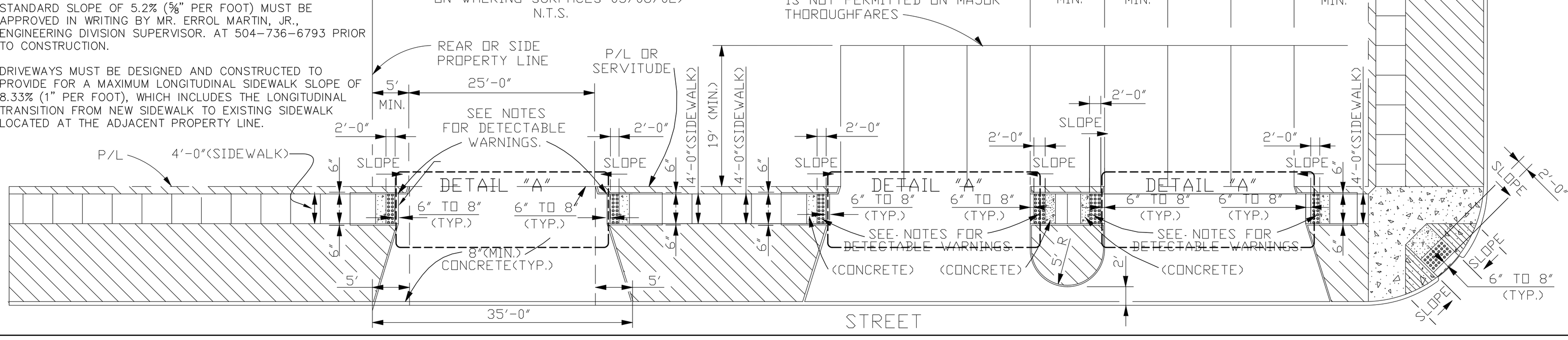

JEFFERSON PARISH DEPARTMENT OF ENGINEERING			
DRAWING TITLE: TYPICAL SITE DIMENSION AND DRIVEWAY LOCATIONS			
DRAWN BY: T.V.C.	DATE: 08/09/93	REVISED BY: L.V.H.	DATE: 09/01/99
REVISED BY: H.J.W.	DATE: 07/26/02	DXF TO AUTOCAD-LT: H.J.W.	DATE: 02/04/05
REVISED BY: H.J.W.	DATE: 02/16/05	REVISED BY: H.J.W.	DATE: 06/23/05
REVISED BY: J.L.	DATE: 06/01/07	REVISED BY: C.H.S.	DATE: 01/29/09
REVISED BY: C.J.	DATE: 05/26/11	REVISED BY: C.J.	DATE: 10/08/10
REVISED BY: J.W.	DATE: 12/09/15	REVISED BY: –	DATE: –
REVISED BY: –	DATE: –	REVISED BY: –	DATE: –
REVISED BY: –	DATE: –	REVISED BY: –	DATE: –
REVISED BY: –	DATE: –	REVISED BY: –	DATE: –
XGDS: AUTOCAD 2012/LT.		WIN: DETAIL-4.DWG	
FILE NUMBER: ENV-09			