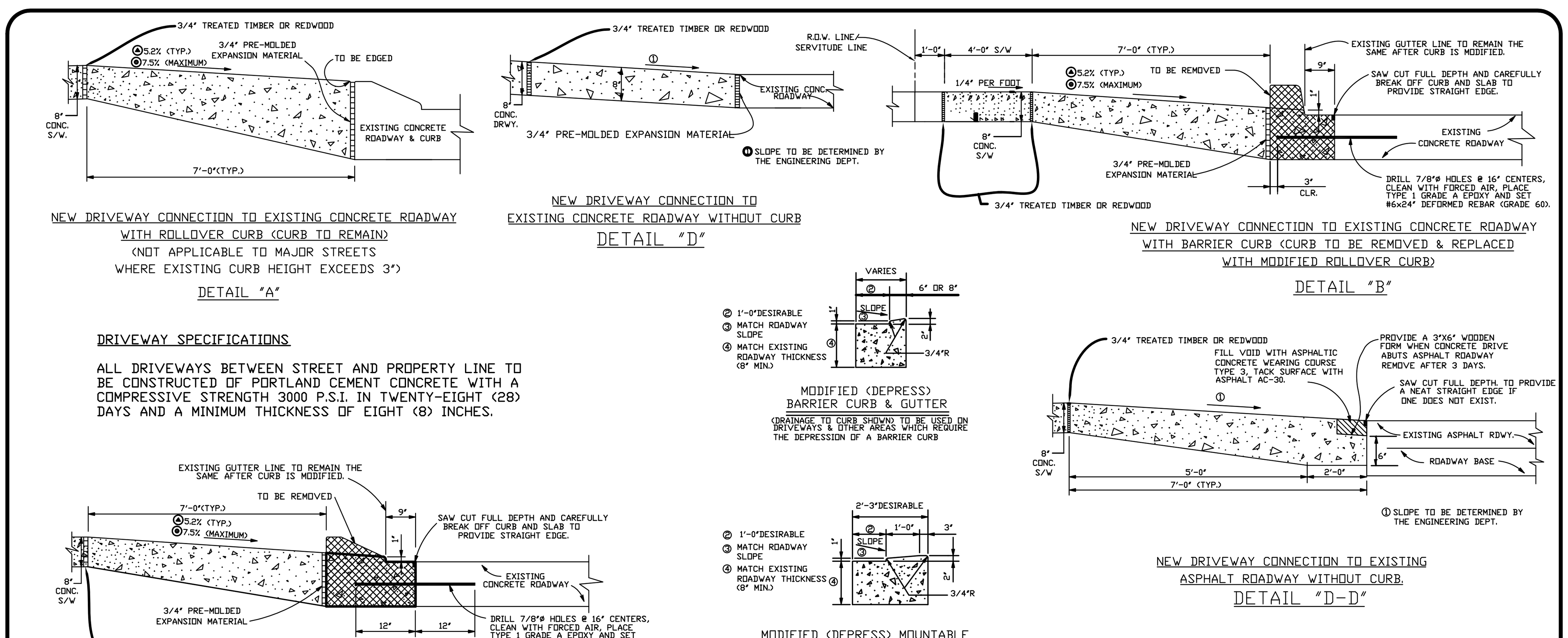

DRIVEWAY SPECIFICATIONS

ALL DRIVEWAYS BETWEEN STREET AND PROPERTY LINE TO BE CONSTRUCTED OF PORTLAND CEMENT CONCRETE WITH A COMPRESSIVE STRENGTH 3000 P.S.I. IN TWENTY-EIGHT (28) DAYS AND A MINIMUM THICKNESS OF EIGHT (8) INCHES.

▲ THE TYPICAL STANDARD DRIVEWAY SLOPE IS 5.2% (5/8" PER FOOT). THE MAXIMUM ALLOWABLE SLOPE IS 7.5% (29/32" PER FOOT). ANY DRIVEWAY SLOPE GREATER THAN THE TYPICAL STANDARD SLOPE OF 5.2% (5/8" PER FOOT) MUST BE APPROVED IN WRITING BY MR. ERROL MARTIN, JR., ENGINEERING DIVISION SUPERVISOR. AT 504-736-6793 PRIOR TO CONSTRUCTION.

◉ DRIVEWAYS MUST BE DESIGNED AND CONSTRUCTED TO PROVIDE FOR A MAXIMUM LONGITUDINAL SIDEWALK SLOPE OF 8.33% (1" PER FOOT), WHICH INCLUDES THE LONGITUDINAL TRANSITION FROM NEW SIDEWALK TO EXISTING SIDEWALK LOCATED AT THE ADJACENT PROPERTY LINE.

NOTE:
FOR PRE-POUR INSPECTION CALL THE DEPARTMENT OF ENGINEERING AT 736-6793 FOR APPOINTMENT.

COMMERCIAL PLAN OF DETAIL NO. 1
SCALE: N.T.S.

JEFFERSON PARISH DEPARTMENT OF ENGINEERING
STANDARD DETAILS FOR CONNECTING DRIVEWAYS TO EXISTING ROADWAYS

REVISED BY: C.J.	DATE: 09-24-2015	DRAWN BY: T.V.C.	DATE: 08/03/93
REVISED BY: J.W.	DATE: 12-8-2015	DXF TO AUTOCAD: H.J.W.	DATE: 02/14/05
REVISED BY:	DATE:	REVISED BY: C.H.S.	DATE: 01/16/09
REVISED BY:	DATE:	REVISED BY: C.J.	DATE: 07-6-2010
REVISED BY: H.J.W.	DATE: 01/06/00	REVISED BY: H.J.W.	DATE: 06/22/05
REVISED BY: C.H.S.	DATE: 06/03/09	REVISED BY: C.J.	DATE: 05/13/11
XGDS: AUTOCAD. 2012	WIN: DETAIL-1.DWG	FILE NUMBER: ENV-09	

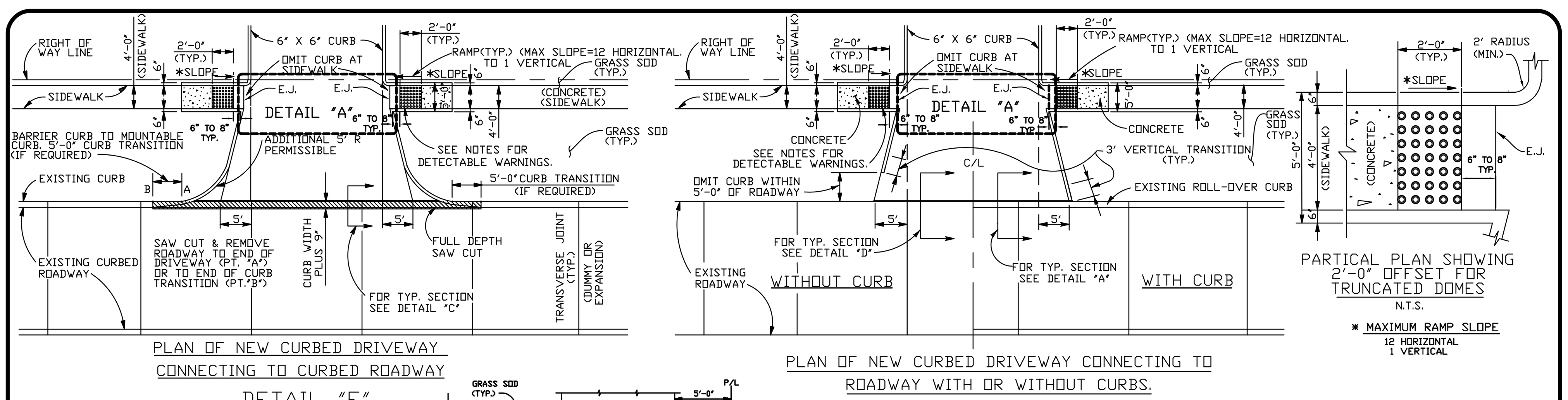

DRIVEWAY SPECIFICATIONS

ALL DRIVEWAYS BETWEEN STREET AND PROPERTY LINE TO BE CONSTRUCTED OF PORTLAND CEMENT CONCRETE, WITH A COMPRESSIVE STRENGTH OF 3,000 P.S.I. IN TWENTY-EIGHT (28) DAYS AND A MINIMUM THICKNESS OF EIGHT (8") INCHES.

▲ THE TYPICAL STANDARD DRIVEWAY SLOPE IS 5.2% (5/8" PER FOOT). THE MAXIMUM ALLOWABLE SLOPE IS 7.5% (29/32" PER FOOT). ANY DRIVEWAY SLOPE GREATER THAN THE TYPICAL STANDARD SLOPE OF 5.2% (5/8" PER FOOT) MUST BE APPROVED IN WRITING BY MR. ERROL MARTIN, JR., ENGINEERING DIVISION SUPERVISOR AT 504-736-6793 PRIOR TO CONSTRUCTION.

◉ DRIVEWAYS MUST BE DESIGNED AND CONSTRUCTED TO PROVIDE FOR A MAXIMUM LONGITUDINAL SIDEWALK SLOPE OF 8.33% (1" PER FOOT), WHICH INCLUDES THE LONGITUDINAL TRANSITION FROM NEW SIDEWALK TO EXISTING SIDEWALK LOCATED AT THE ADJACENT PROPERTY LINE.

NOTES:

1. TRUNCATED DOMES IN A DETECTABLE WARNING SURFACE SHALL HAVE A BASE DIAMETER OF 0.9 INCHES (23 mm) MINIMUM TO 1.4 INCHES (36 mm) MAXIMUM, A TOP DIAMETER OF 50% OF THE BASE DIAMETER MINIMUM TO 65% OF THE BASE DIAMETER MAXIMUM, AND A HEIGHT OF 0.2 INCHES (5 mm).
2. TRUNCATED DOMES IN A DETECTABLE WARNING SURFACE SHALL HAVE A CENTER-TO-CENTER SPACING OF 1.6 INCHES (41 mm) MINIMUM AND 2.4 INCHES (61 mm) MAXIMUM, AND A BASE-TO-BASE SPACING OF 0.65 INCHES (16 mm) MINIMUM, MEASURED BETWEEN THE MOST ADJACENT DOMES ON SQUARE GRID.
3. TRUNCATED DOMES SURFACES SHALL CONTRAST VISUALLY WITH ADJACENT WALKING SURFACES EITHER LIGHT-ON-DARK, OR DARK ON LIGHT.
4. THE MATERIAL USED TO PROVIDE CONTRAST SHALL BE AN INTEGRAL PART OF THE WALKING SURFACE. DETECTABLE WARNINGS USED ON INTERIOR SURFACES SHALL DIFFER FROM ADJOINING WALKING SURFACES IN RESILIENCY OR SOUND-ON-CANE CONTACT.
5. TRUNCATED DOMES ON CURB RAMPS WITHIN THE STREET R.O.W. SHALL BE CAST-IN PLACE. PREFABRICATED DETECTABLE WARNING UNITS INSTALLED DIRECTLY IN WET CONCRETE. SURFACE APPLIED OR SURFACE MOUNTED SYSTEMS WITH MECHANICAL OR ADHESIVE ANCHORAGE ARE NOT ACCEPTABLE.
6. TRUNCATED DOMES SHALL COVER AT LEAST 2 FEET IN DEPTH AND EXTEND FULL WIDTH OF THE RAMP. ANY RAMP HAVING FLARED SIDES WILL NOT BE REQUIRED TO HAVE THESE DETECTABLE WARNINGS ON THE FLARES.
7. THE LIMITS OF THE MAIN SURFACE OF THE RAMP ON WHICH THE DETECTABLE WARNINGS ARE PLACED SHALL HAVE A REDDISH COLOR SIMILAR TO THAT OF "TERRA COTTA". THE COLOR MUST BE APPROVED BY JEFFERSON PARISH DEPARTMENT OF ENGINEERING.
8. STAMPING OF TRUNCATED DOMES WITHIN THE R.O.W. WILL NOT BE ALLOWED.

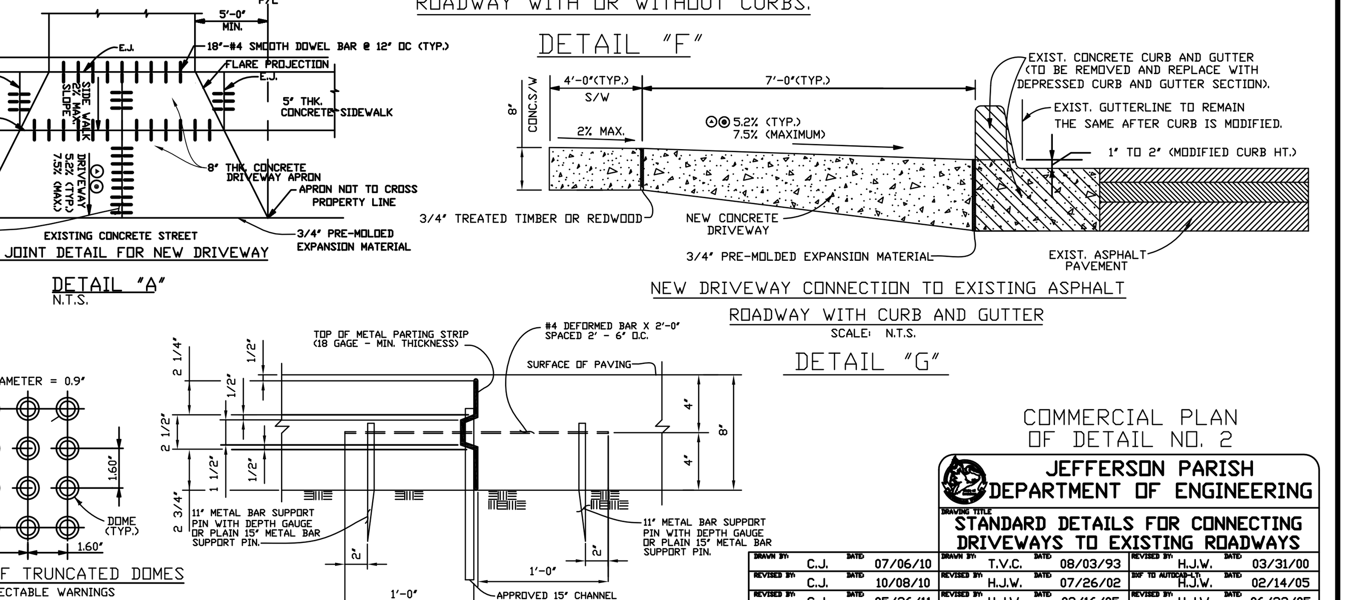

NOTE:
FOR PRE-POUR INSPECTION CALL THE DEPARTMENT OF ENGINEERING AT 736-6793 FOR APPOINTMENT.

COMMERCIAL PLAN OF DETAIL NO. 2

JEFFERSON PARISH DEPARTMENT OF ENGINEERING
STANDARD DETAILS FOR CONNECTING DRIVEWAYS TO EXISTING ROADWAYS

DRAWN BY: C.J.	DATE: 07/06/10	DRAWN BY: T.V.C.	DATE: 08/03/93
REVISED BY: C.J.	DATE: 10/08/10	DXF TO AUTOCAD: H.J.W.	DATE: 07/26/02
REVISED BY: C.J.	DATE: 05/26/11	REVISED BY: H.J.W.	DATE: 02/16/05
REVISED BY: C.J.	DATE: 09/24/15	REVISED BY: J.L.	DATE: 06/01/07
REVISED BY: J.W.	DATE: 12/08/15	XGDS: AUTOCAD 2012/LT.	
REVISED BY: H.J.W.	DATE: 03/31/00	DXF TO AUTOCAD: H.J.W.	DATE: 02/14/05
REVISED BY: H.J.W.	DATE: 06/22/05	REVISED BY: C.H.S.	DATE: 01/21/09
WIN: DETAIL-2.DWG	FILE NUMBER: ENV-09		

SCALE: N.T.S.

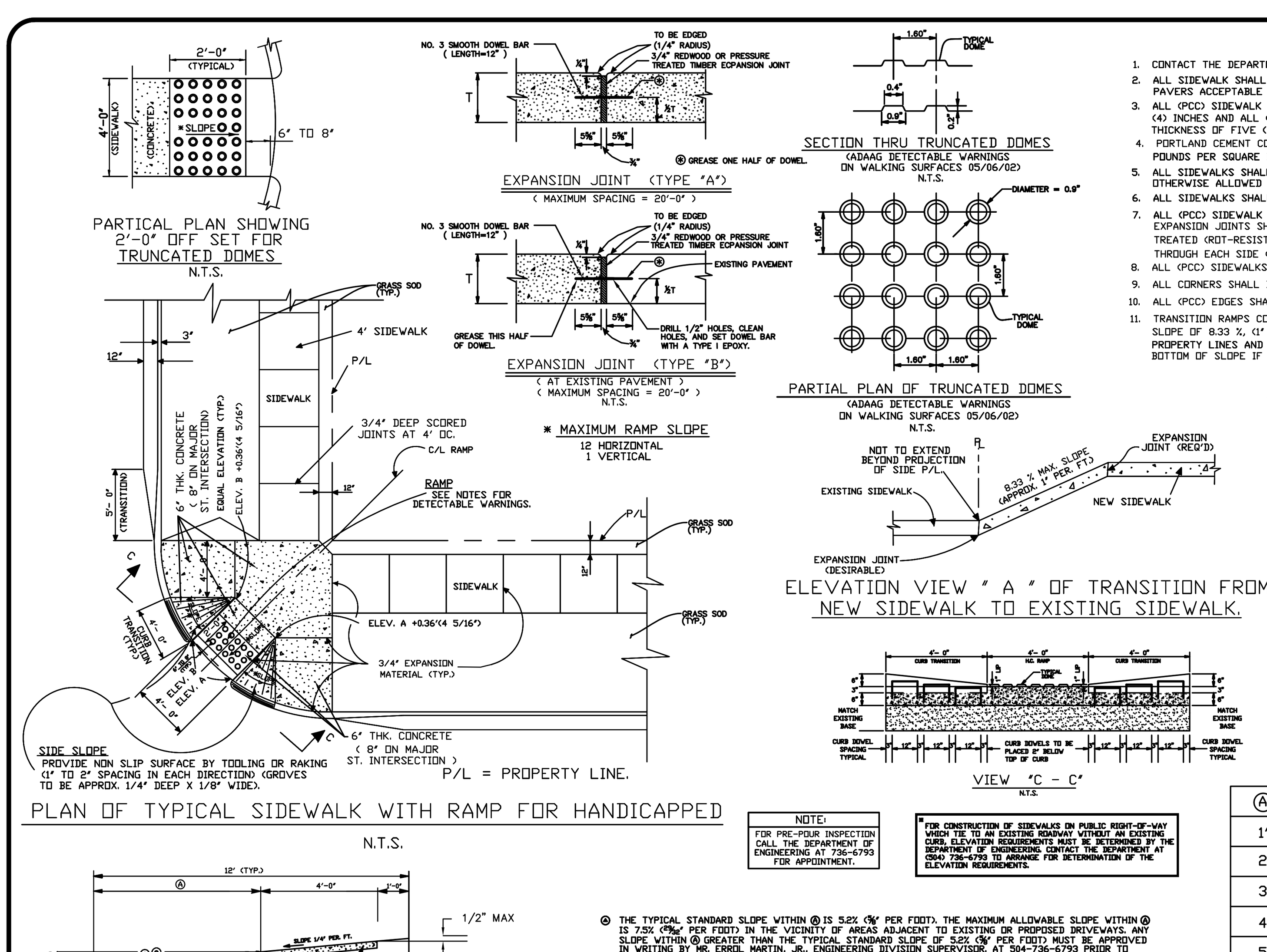

* SPECIFICATIONS *

1. CONTACT THE DEPARTMENT OF ENGINEERING, 736-6500 PRIOR TO BEGINNING ANY SIDEWALK CONSTRUCTION.
2. ALL SIDEWALK SHALL BE CONSTRUCTED OF PORTLAND CEMENT CONCRETE(PCC). CONCRETE OR BRICK PAVERS ACCEPTABLE FOR SINGLE FAMILY HOMES.
3. ALL (PCC) SIDEWALK CONSTRUCTED FOR RESIDENTAL DWELLING SHALL HAVE A MINIMUM THICKNESS OF FOUR (4) INCHES AND ALL (PCC) SIDEWALKS CONSTRUCTED FOR COMMERICAL BUILDINGS SHALL HAVE A MINIMUM THICKNESS OF FIVE (5) INCHES.
4. PORTLAND CEMENT CONCRETE SHALL HAVE A COMPRESSIVE STRENGTH OF THREE THOUSAND (3000) POUNDS PER SQUARE INCH IN TWENTY-EIGHT DAYS.
5. ALL SIDEWALKS SHALL BE CONSTRUCTED AT A DISTANCE OF ONE (1) FOOT FROM THE PROPERTY LINE UNLESS OTHERWISE ALLOWED BY THE DIRECTOR OF THE DEPARTMENT OF ENGINEERING.
6. ALL SIDEWALKS SHALL HAVE A MINIMUM WIDTH OF FOUR (4) FEET.
7. ALL (PCC) SIDEWALK SHALL HAVE EXPANSION JOINTS NO FURTHER APART THAN TWENTY (20) FEET. EXPANSION JOINTS SHALL BE CONSTRUCTED OF THREE-FOURTHS INCH THICK TREATED (ROT-RESISTANT) TIMBER OR REDWOOD WITH MINIMUM OF THREE NO. 3 SMOOTH DOWELS. THROUGH EACH SIDE (SEE EXPANSION TYPE "A" & "B").
8. ALL (PCC) SIDEWALKS SHALL BE SCORED AT FOUR (4) FOOT INTERVALS TO A DEPTH OF 3/4".
9. ALL CORNERS SHALL BE FORMED BY EXPANSION JOINTS (SEE PLAN OF CORNER AT LEFT).
10. ALL (PCC) EDGES SHALL BE TOOLED TO ONE-FOURTH (1/4) INCH RADIUS.
11. TRANSITION RAMPS CONSTRUCTED WHERE NEW SIDEWALK MEETS EXISTING SIDEWALK SHALL HAVE A MAXIMUM SLOPE OF 8.33 %, (1" DROP EVERY 12"). SUCH RAMPS SHALL NOT EXTEND BEYOND THE PROJECTED SIDE PROPERTY LINES AND SHALL HAVE AN EXPANSION JOINT AT TOP OF SLOPE. PLACE EXPANSION JOINT AT BOTTOM OF SLOPE IF POSSIBLE (SEE ELEVATION VIEW "A").

NOTES:

1. TRUNCATED DOMES IN A DETECTABLE WARNING SURFACE SHALL HAVE A BASE DIAMETER OF 0.9 INCHES (23 mm) MINIMUM TO 1.4 INCHES (36 mm) MAXIMUM, A TOP DIAMETER OF 50% OF THE BASE DIAMETER MINIMUM TO 65% OF THE BASE DIAMETER MAXIMUM, AND A HEIGHT OF 0.2 INCHES (5 mm).
2. TRUNCATED DOMES IN A DETECTABLE WARNING SURFACE SHALL HAVE A CENTER-TO-CENTER SPACING OF 1.6 INCHES (41 mm) MINIMUM AND 2.4 INCHES (61 mm) MAXIMUM, AND A BASE-TO-BASE SPACING OF 0.65 INCHES (16 mm) MINIMUM, MEASURED BETWEEN THE MOST ADJACENT DOMES ON SQUARE GRID.
3. TRUNCATED DOMES SURFACES SHALL CONTRAST VISUALLY WITH ADJACENT WALKING SURFACES EITHER LIGHT-ON-DARK, OR DARK ON LIGHT.
4. THE MATERIAL USED TO PROVIDE CONTRAST SHALL BE AN INTEGRAL PART OF THE WALKING SURFACE. DETECTABLE WARNINGS USED ON INTERIOR SURFACES SHALL DIFFER FROM ADJOINING WALKING SURFACES IN RESILIENCY OR SOUND-ON-CANE CONTACT.
5. TRUNCATED DOMES ON CURB RAMPS WITHIN THE STREET R.O.W. SHALL BE CAST-IN-PLACE, PREFABRICATED DETECTABLE WARNING UNITS INSTALLED DIRECTLY IN WET CONCRETE. SURFACE APPLIED OR SURFACE MOUNTED SYSTEMS WITH MECHANICAL OR ADHESIVE ANCHORAGE ARE NOT ACCEPTABLE.
6. TRUNCATED DOMES SHALL COVER AT LEAST 2 FEET IN DEPTH AND EXTEND FULL WIDTH OF THE RAMP. ANY RAMP HAVING FLARED SIDES WILL NOT BE REQUIRED TO HAVE THESE DETECTABLE WARNINGS ON THE FLARES.
7. THE LIMITS OF THE MAIN SURFACE OF THE RAMP ON WHICH THE DETECTABLE WARNINGS ARE PLACED SHALL HAVE A REDDISH COLOR SIMILAR TO THAT OF "TERRA COTTA". THE COLOR MUST BE APPROVED BY JEFFERSON PARISH DEPARTMENT OF ENGINEERING.
8. STAMPING OF TRUNCATED DOMES WITHIN THE R.O.W. WILL NOT BE ALLOWED.

NOTE:
FOR PRE-POUR INSPECTION CALL THE DEPARTMENT OF ENGINEERING AT 736-6793 FOR APPOINTMENT.

* FOR CONSTRUCTION OF SIDEWALKS ON PUBLIC RIGHT-OF-WAY WHICH TIE TO AN EXISTING ROADWAY WITHOUT AN EXISTING CURB, ELEVATION REQUIREMENTS MUST BE DETERMINED BY THE DEPARTMENT OF ENGINEERING. CONTACT THE DEPARTMENT AT (504) 736-6793 TO ARRANGE FOR DETERMINATION OF THE ELEVATION REQUIREMENTS.

Ⓐ THE TYPICAL STANDARD SLOPE WITHIN Ⓐ IS 5.2% (5/8" PER FOOT). THE MAXIMUM ALLOWABLE SLOPE WITHIN Ⓐ IS 7.5% (29/32" PER FOOT) IN THE VICINITY OF AREAS ADJACENT TO EXISTING OR PROPOSED DRIVEWAYS. ANY SLOPE WITHIN Ⓐ GREATER THAN THE TYPICAL STANDARD SLOPE OF 5.2% (5/8" PER FOOT) MUST BE APPROVED IN WRITING BY MR. ERROL MARTIN, JR., ENGINEERING DIVISION SUPERVISOR. AT 504-736-6793 PRIOR TO CONSTRUCTION.

◉ DRIVEWAYS MUST BE DESIGNED AND CONSTRUCTED TO PROVIDE FOR A MAXIMUM LONGITUDINAL SIDEWALK SLOPE OF 8.33% (1" PER FOOT), WHICH INCLUDES THE LONGITUDINAL TRANSITION FROM NEW SIDEWALK TO EXISTING SIDEWALK LOCATED AT THE ADJACENT PROPERTY LINE.

Ⓐ	Ⓑ
1'	5/8"
2'	1 1/4"
3'	1 7/8"
4'	2 1/2"
5'	3 1/8"
6'	3 3/4"
7'	4 3/8"

COMMERCIAL PLAN OF DETAIL NO. 6

JEFFERSON PARISH DEPARTMENT OF ENGINEERING
TYPICAL SIDEWALK DETAILS

DRAWN BY: H.J.W.	DATE: 1992	REVISED BY: T.V.C.	DATE: 08/11/93
REVISED BY: H.J.W.	DATE: 07/26/02	DXF TO AUTOCAD: H.J.W.	DATE: 01/31/05
REVISED BY: H.J.W.	DATE: 02/16/05	REVISED BY: H.J.W.	DATE: 06/29/05
REVISED BY: J.L.	DATE: 06/01/07	REVISED BY: J.L.	DATE: 08/07/07
REVISED BY: C.H.S.	DATE: 02/18/09	REVISED BY: C.J.	DATE: 07-06-10
C.J.	09-24-15	REVISED BY: C.J.	DATE: 10-08-10
XGDS: AUTOCAD 2000/LT. 2000	WIN: DETAIL-6.DWG	FILE NUMBER: ENV-09	

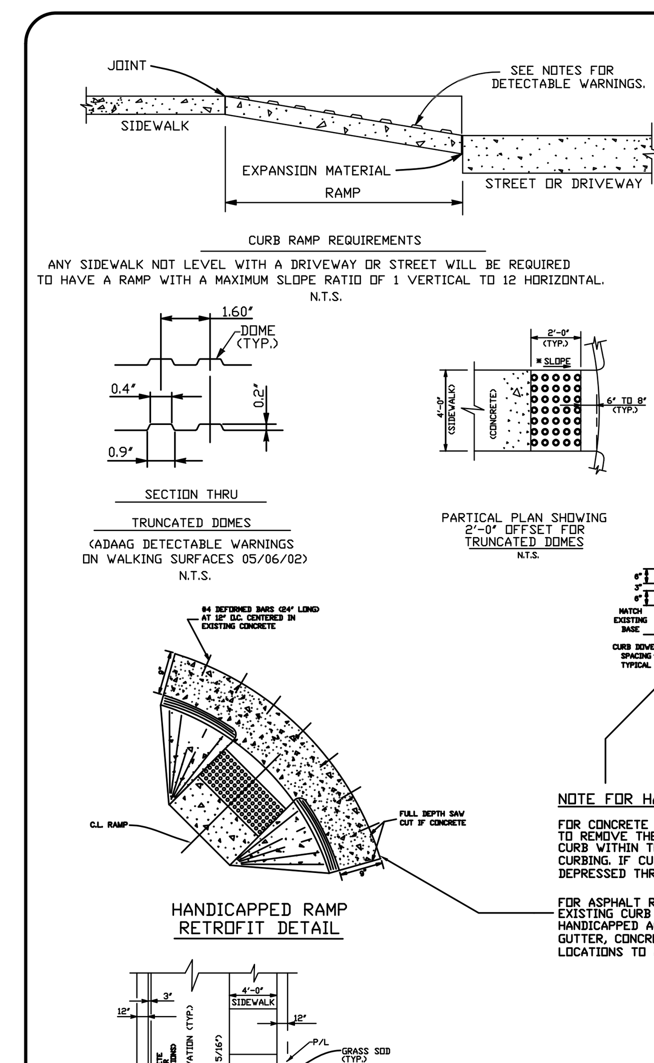

NOTES:

1. TRUNCATED DOMES IN A DETECTABLE WARNING SURFACE SHALL HAVE A BASE DIAMETER OF 0.9 INCHES (23 mm) MINIMUM TO 1.4 INCHES (36 mm) MAXIMUM, A TOP DIAMETER OF 50% OF THE BASE DIAMETER MINIMUM TO 65% OF THE BASE DIAMETER MAXIMUM, AND A HEIGHT OF 0.2 INCHES (5 mm).
2. TRUNCATED DOMES IN A DETECTABLE WARNING SURFACE SHALL HAVE A CENTER-TO-CENTER SPACING OF 1.6 INCHES (41 mm) MINIMUM AND 2.4 INCHES (61 mm) MAXIMUM, AND A BASE-TO-BASE SPACING OF 0.65 INCHES (16 mm) MINIMUM, MEASURED BETWEEN THE MOST ADJACENT DOMES ON SQUARE GRID.
3. TRUNCATED DOMES SURFACES SHALL CONTRAST VISUALLY WITH ADJACENT WALKING SURFACES EITHER LIGHT-ON-DARK, OR DARK ON LIGHT.
4. THE MATERIAL USED TO PROVIDE CONTRAST SHALL BE AN INTEGRAL PART OF THE WALKING SURFACE. DETECTABLE WARNINGS USED ON INTERIOR SURFACES SHALL DIFFER FROM ADJOINING WALKING SURFACES IN RESILIENCY OR SOUND-ON-CANE CONTACT.
5. TRUNCATED DOMES ON CURB RAMPS WITHIN THE STREET R.O.W. SHALL BE CAST-IN-PLACE. PREFABRICATED DETECTABLE WARNING UNITS INSTALLED DIRECTLY IN WET CONCRETE. SURFACE APPLIED OR SURFACE MOUNTED SYSTEMS WITH MECHANICAL OR ADHESIVE ANCHORAGE ARE NOT ACCEPTABLE.
6. TRUNCATED DOMES SHALL COVER AT LEAST 2 FEET IN DEPTH AND EXTEND FULL WIDTH OF THE RAMP. ANY RAMP HAVING FLARED SIDES WILL NOT BE REQUIRED TO HAVE THESE DETECTABLE WARNINGS ON THE FLARES.
7. THE LIMITS OF THE MAIN SURFACE OF THE RAMP ON WHICH THE DETECTABLE WARNINGS ARE PLACED SHALL HAVE A REDDISH COLOR SIMILAR TO THAT OF "TERRA COTTA". THE COLOR MUST BE APPROVED BY JEFFERSON PARISH DEPARTMENT OF ENGINEERING.
8. STAMPING OF TRUNCATED DOMES WITHIN THE R.O.W. WILL NOT BE ALLOWED.

NOTE FOR HANDICAPPED RAMP CONNECTION TO EXISTING ROAD

FOR CONCRETE ROADWAY CONTRACTOR SHALL MAKE FULL DEPTH SAW-CUT TO REMOVE THE PORTION OF EXISTING ROADWAY AND INTEGRAL CONCRETE CURB WITHIN THE LIMITS SHOWN AND REPLACE WITH HANDICAPPED ACCESSIBLE CURBING. IF CURB IS NOT POURED MONOLITHICALLY, CONCRETE WILL NEED TO BE DEPRESSED THREE (3) INCHES AT CURB LOCATIONS TO ALLOW FOR CURB DOWELS.

FOR ASPHALT ROADWAY CONTRACTOR SHALL MAKE FULL DEPTH SAW-CUT TO REMOVE EXISTING CURB AND GUTTER (AND POSSIBLE ASPHALT OVERLAY), AND REPLACE WITH HANDICAPPED ACCESSIBLE CURBING. IF CURB IS NOT POURED MONOLITHICALLY WITH GUTTER, CONCRETE WILL NEED TO BE DEPRESSED THREE (3) INCHES AT CURB LOCATIONS TO ALLOW FOR CURB DOWELS.

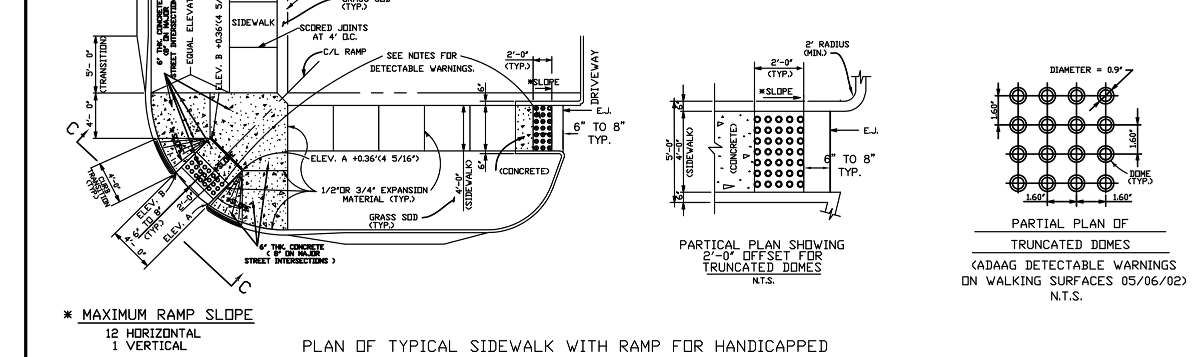

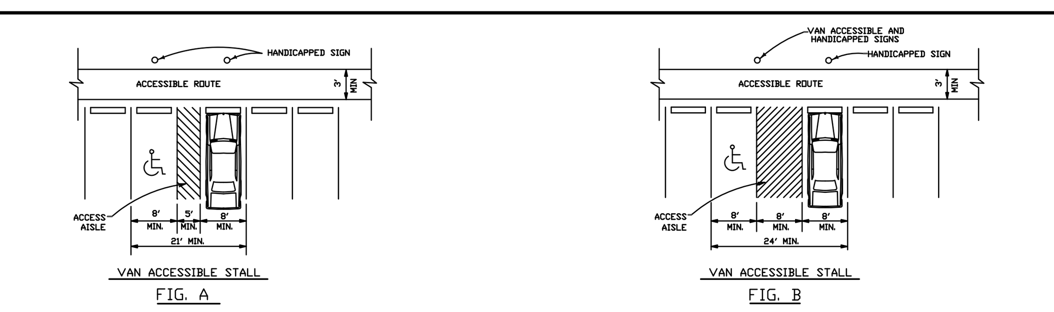

PARKING SPACE REQUIREMENTS

NOTE:
PARKING SPACES FOR PHYSICALLY HANDICAPPED PEOPLE SHALL BE AT LEAST 8' WIDE AND SHALL HAVE AN ADJACENT ACCESS AISLE 5' WIDE MINIMUM (SEE FIG. A). PARKING ACCESS AISLE SHALL BE PART OF THE ACCESSIBLE ROUTE TO THE BUILDING OR FACILITY ENTRANCE. TWO ACCESSIBLE PARKING SPACES MAY SHARE A COMMON ACCESS AISLE. PARKED VEHICLE OVERHANGS SHALL NOT REDUCE THE CLEAR WIDTH OF AN ACCESSIBLE CIRCULATION ROUTE. ACCESSIBLE PARKING SPACES SHALL BE DESIGNATED AS RESERVED FOR PHYSICALLY HANDICAPPED PEOPLE BY A SIGN SHOWING THE SYMBOL OF ACCESSIBILITY. SUCH SIGNS SHALL NOT BE OBSCURED BY A VEHICLE PARKED IN THE SPACE.

NOTE:
FOR PRE-POUR INSPECTION CALL THE DEPARTMENT OF ENGINEERING AT 736-6793 FOR APPOINTMENT.

COMMERCIAL PLAN OF DETAIL NO. 5
NOT TO SCALE

JEFFERSON PARISH DEPARTMENT OF ENGINEERING
HANDICAPPED REQUIREMENTS

DRAWN BY: C.J. 06/25/10	DRAWN BY: T.V.C. 08/05/93	REVISED BY: H.J.W. 09/26/97
DXF TO AUTOCAD: C.J. 10/08/10	DXF TO AUTOCAD: H.J.W. 07/26/02	REVISED BY: H.J.W. 02/01/05
REVISED BY: C.J. 05/13/11	REVISED BY: H.J.W. 02/16/05	REVISED BY: H.J.W. 06/23/05
REVISED BY: C.J. 09/24/15	REVISED BY: J.L. 06/01/07	REVISED BY: C.H.S. 01/30/09
REVISED BY: – –	REVISED BY: C.J. 06/25/10	REVISED BY: – –
XGDS: AUTOCAD 2000/LT. 2000	WIN: DETAIL-5(2000).DWG	FILE NUMBER: ENV-09

SHEET 1 OF 1

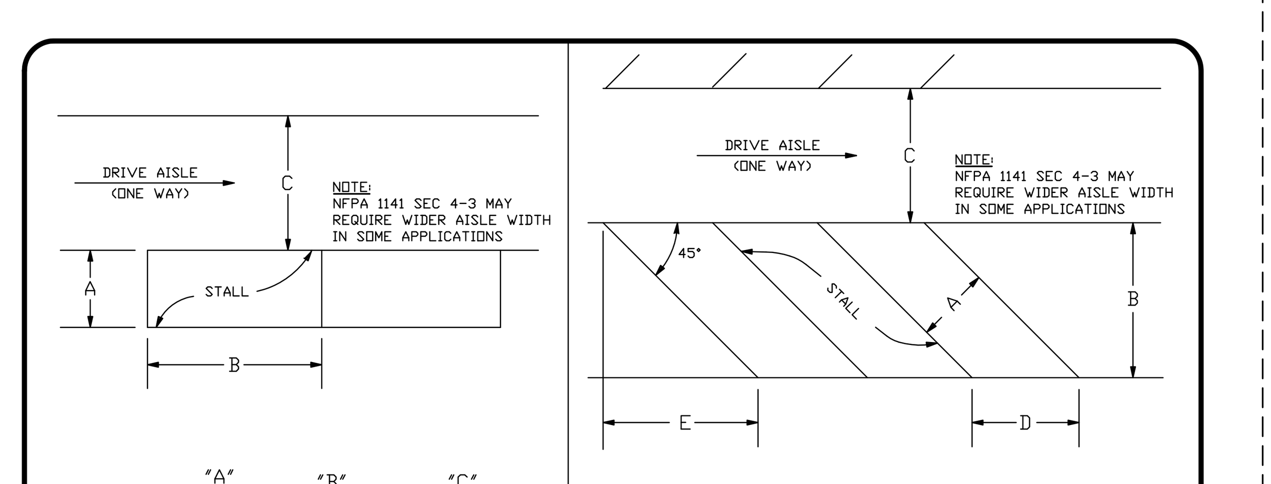

PARALLEL PARKING	"A" STALL WIDTH	"B" STALL LENGTH	"C" MIN. AISLE WIDTH
*(COMPACT)	*8'-0"	20.0	10.0
	8'-6"	23.0	12.0
	9'-0"	23.0	12.0
	9'-6"	23.0	12.0
	10'-0"	23.0	12.0

PARKING ANGLE 45°	"A" STALL WIDTH	"B" AISLE TO END OF STALL	"C" MIN. AISLE WIDTH	"D" STALL WIDTH ON SKEW	"E"
*(COMPACT)	*8'-0"	16.3	13.5	11.6	16.3
	8'-6"	19.4	13.5	12.0	19.4
	9'-0"	19.8	13.0	12.7	19.8
	9'-6"	20.1	13.0	13.4	20.1
	10'-0"	20.5	13.0	14.1	20.5

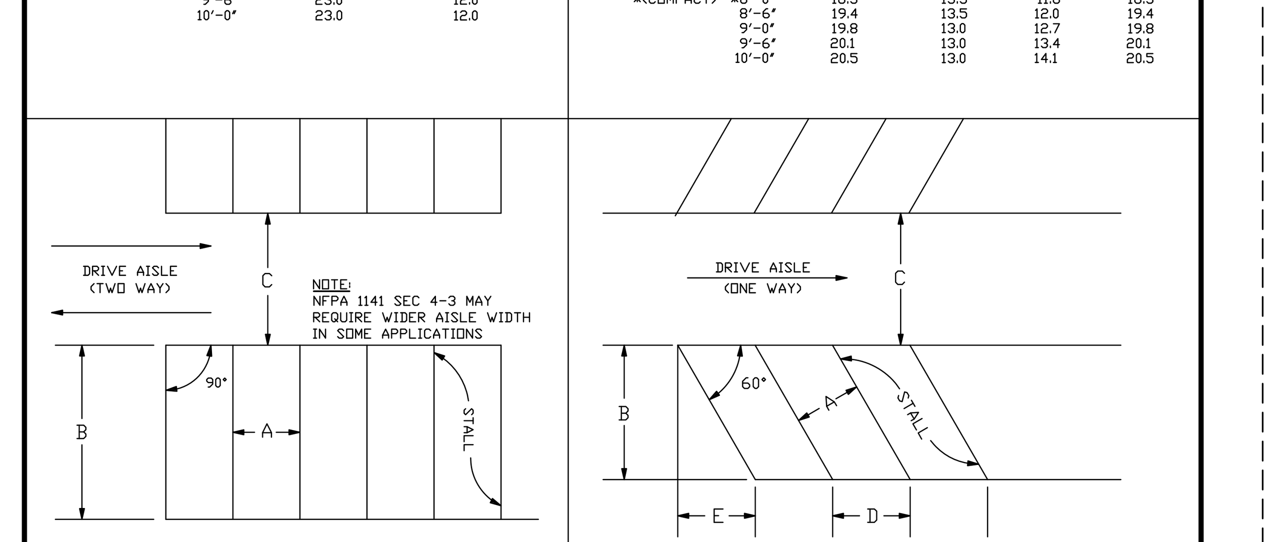

PARALLEL PARKING 90°	"A" STALL WIDTH	"B" STALL LENGTH	"C" MIN. AISLE WIDTH
*(COMPACT)	*8'-0"	15.0	22.0
	8'-6"	19.0	25.0
	9'-0"	18.0	24.0
	9'-6"	18.0	24.0
	10'-0"	18.0	24.0

PARKING ANGLE 60°	"A" STALL WIDTH	"B" AISLE TO END OF STALL	"C" MIN. AISLE WIDTH	"D" STALL WIDTH ON SKEW	"E"
*(COMPACT)	*8'-0"	17.0	18.5	9.4	10.1
	8'-6"	20.7	18.5	9.8	11.9
	9'-0"	21.0	18.0	10.4	12.12
	9'-6"	21.2	18.0	11.0	12.24
	10'-0"	21.5	18.0	11.5	12.41

*APPLIES ONLY TO COMPACT PARKING SPACES. SEE COMPREHENSIVE ZONING ORDINANCE.

WHEN THE END OF PARKING STALL ABUTS THE RIGHT OF WAY LINE, OR SIDEWALK SERVITUDE LINE, USE DETAIL "A" OR "B".

DETAIL "A" OR "B" WILL ALSO APPLY IN CASES WHEN PARKING STALL DOES NOT ABUT THE RIGHT OF WAY LINE OR SIDEWALK SERVITUDE LINE, BUT IS WITHIN 10 FEET OF SAID LINE.

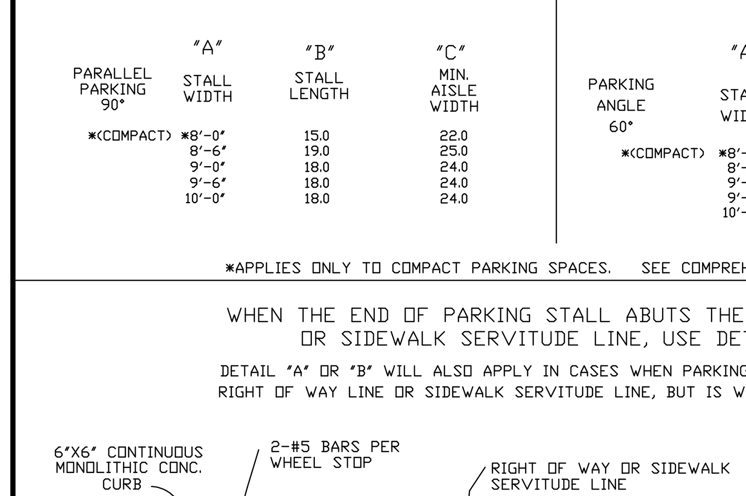

COMMERCIAL PLAN OF DETAIL NO. 3

PARKING STALLS MUST BE STRIPED WITH A FOUR (4) INCH CONTRASTING STRIPE (YELLOW ON CONCRETE AND YELLOW OR WHITE ON ASPHALT PARKING LOT).

JEFFERSON PARISH DEPARTMENT OF ENGINEERING
TYPICAL SPACE REQUIREMENTS FOR SELF-PARKING AT VARIOUS ANGLES

DRAWN BY: T.V.C.	DATE: 08/12/93	REVISED BY: L.V.H.	DATE: 02/05/98
REVISED BY: L.V.H.	DATE: 10/01/98	REVISED BY: L.V.H.	DATE: 06/06/00
DXF TO AUTOCAD: H.J.W.	DATE: 02/11/05	REVISED BY: H.J.W.	DATE: 06/23/05
REVISED BY: C.H.S.	DATE: 01/27/09	REVISED BY: –	DATE: –
XGDS: AUTOCAD 2000/LT. 2000	WIN: DETAIL-3(2000).DWG	FILE NUMBER: ENV-09	

SCALE: N.T.S.

SITE PLAN GENERAL NOTES

SIDEWALKS

1. ALL SIDEWALKS SHALL BE CONSTRUCTED OF PORTLAND CEMENT CONCRETE, WITH A COMPRESSIVE STRENGTH OF 3000 P.S.I. IN TWENTY-EIGHT DAYS, AND A MINIMUM THICKNESS OF 5".
2. ALL SIDEWALKS ARE TO HAVE A WIDTH OF 4' AND SHALL BE CONSTRUCTED AS PER THE LOCATION SHOWN ON THIS PLAN.
3. ALL SIDEWALKS SHALL BE SCORED TO A DEPTH OF 3/4" AT 4-FOOT INTERVALS, WITH EXPANSION JOINTS PLACED AT 20-FOOT INTERVALS.
4. EXPANSION JOINTS SHALL BE CONSTRUCTED OF 1/2" THICK PRE-MOLDED EXPANSION MATERIAL WITH ALL CORNERS TO BE FORMED BY EXPANSION JOINTS.
5. ANY SIDEWALK OR ACCESSIBLE ROUTE THAT IS NOT AT LEVEL ELEVATION AT ITS INTERSECTION WITH A DRIVEWAY OR STREET SHALL BE REQUIRED TO INSTALL A CURB RAMP AT A MAXIMUM SLOPE OF 1:12, WITH A MAXIMUM RISE OF 30" AND A MINIMUM LEVEL STRAIGHT CURB SEGMENT OF 48".
6. THE DRIVEWAY AND INTERSECTION HANDICAP RAMPS SHALL BE CONSTRUCTED WITH THE CURRENT ADA APPROVED DETECTABLE WARNING SURFACES. THESE DETECTABLE WARNINGS SHALL CONSIST OF TRUNCATED DOMES WITH A DIAMETER OF NOMINAL .9"(23mm), A HEIGHT OF NOMINAL .2"(5mm) AND CENTER-TO-CENTER SPACING OF NOMINAL 2.35"(60mm) AND SHALL CONTRAST VISUALLY WITH ADJOINING SURFACES, EITHER LIGHT-ON-DARK, OR DARK-ON-LIGHT. THE MATERIAL USED TO PROVIDE CONTRAST SHALL BE AN INTEGRAL PART OF THE WALKING SURFACE.
7. SIDEWALK SHALL BE SLOPED 1" TOWARDS THE STREET.
8. CONTRACTOR SHALL CONTACT THE DEPARTMENT OF ENGINEERING, #736-6793, TWO DAYS PRIOR TO ANY WORK DONE WITHIN THE PARISH RIGHT-OF-WAY OR SERVITUDE.

DRIVEWAYS

1. ALL DRIVEWAYS BETWEEN STREET AND PROPERTY LINE SHALL BE CONSTRUCTED OF PORTLAND CEMENT CONCRETE, WITH A COMPRESSIVE STRENGTH OF 3,000 P.S.I. IN 28 DAYS AND A MINIMUM THICKNESS OF 8".
2. ALL DRIVEWAYS BETWEEN STREET AND PROPERTY LINE CONNECTING WITH AN EXISTING ROADWAY ARE TO BE CONSTRUCTED IN ACCORDANCE WITH DETAIL AS SHOWN ON THIS PLAN.
3. EXACT LOCATION OF ROADWAY AND DRIVEWAY CURBING WILL BE DETERMINED IN THE FIELD BY A REPRESENTATIVE OF THE DEPARTMENT OF ENGINEERING.
4. CONTRACTOR SHALL CONTACT THE DEPARTMENT OF ENGINEERING, #736-6793, TWO DAYS PRIOR TO THE FORMING OF THE DRIVEWAYS CONNECTING TO THE ROADWAY.

PARKING LOT

1. PARKING STALLS MUST BE STRIPED WITH A 4-INCH CONTRASTING STRIPE (YELLOW ON CONCRETE AND YELLOW OR WHITE ON ASPHALT PARKING LOT).
2. HANDICAP PARKING SPACE TO BE DESIGNATE BY BLUE STRIPING AND EITHER A BLUE SYMBOL ON A WHITE BACKGROUND OR A WHITE SYMBOL ON A BLUE BACKGROUND. HANDICAP PARKING STALL REQUIRES THE INSTALLATION OF THE PROPER SIGNAGE.
3. ALL WHEEL STOPS AND CONCRETE CURBS SHALL BE CONSTRUCTED IN ACCORDANCE WITH THE DETAIL SHOWN ON THIS PLAN.
4. ALL PARKING SPACES ARE TO BE LAID OUT IN ACCORDANCE WITH THE TYPICAL DETAIL AS SHOWN ON THIS PLAN, UNLESS OTHERWISE INDICATED ON THIS PLAN.

TRAFFIC CONTROLS

1. ANY WORK IN THE ROADWAY OR ADJACENT TO THE ROADWAY CAUSING AN INTERFERENCE TO VEHICULAR TRAFFIC REQUIRES PRIOR NOTIFICATION TO THE JEFFERSON PARISH TRAFFIC ENGINEERING DIVISION AND CONFORMITY TO THE REQUIREMENTS OF THE UNIFORM MANUAL ON TRAFFIC CONTROL DEVICES OF THE STATE OF LOUISIANA. THE CONTRACTOR MUST FURNISH ALL NECESSARY TRAFFIC SIGNS AND/OR BARRICADES AND MAINTAIN THEM DURING CONSTRUCTION ACTIVITY.
PHONE: 736-6530.

NOTE: IN ACCORDANCE WITH ARTICLE 113 (LOT GRADE) OF THE JEFFERSON PARISH BUILDING CODE, ALL WATER RUNOFF SHALL NOT BE ALLOWED TO ENTER ADJOINING PROPERTIES.

NOTE:
FOR PRE-POUR INSPECTION CALL THE DEPARTMENT OF ENGINEERING AT 736-6793 FOR APPOINTMENT.

JEFFERSON PARISH
DEPARTMENT OF ENGINEERING

DRAWING TITLE
COMMERCIAL PLAN OF DESIGN DETAILS AND GENERAL NOTES

DRAWN BY: H.J.W.	DATE: 10/14/02	DXF TO AUTOCAD-LT: H.J.W.	DATE: 01/15/04
REVISED BY: H.J.W.	DATE: 01/07/05	REVISED BY: H.J.W.	DATE: 02/17/05
REVISED BY: H.J.W.	DATE: 06/22/05	REVISED BY: J.L.	DATE: 06/01/07
REVISED BY: C.H.S.	DATE: 02/03/09	REVISED BY: C.H.S	DATE: 06/03/09
REVISED BY: C.J.	DATE: 10/08/10	REVISED BY: C.J.	DATE: 05/26/11
REVISED BY: C.J.	DATE: 09/9/11	REVISED BY: C.J.	DATE: 09/24/15
REVISED BY: J.W.	DATE: 12/08/15	REVISED BY: –	DATE: –
REVISED BY: –	DATE: –	REVISED BY: –	DATE: –
REVISED BY: –	DATE: –	REVISED BY: –	DATE: –
REVISED BY: –	DATE: –	REVISED BY: –	DATE: –
XGDS: AUTOCAD 2000/LT. 2000		WIN: ONESTOP1(2000).DWG	

"IF THE CONSTRUCTION OF THE SUBJECT PROPERTY IS NOT IN COMPLIANCE WITH JEFFERSON PARISH STANDARDS, REGULATIONS, ORDINANCES, OR RESOLUTIONS DUE TO THE UNAUTHORIZED ALTERATION OF THIS OFFICIAL JEFFERSON PARISH ENGINEERING DETAIL SHEET, THE PROPERTY MUST BE BROUGHT INTO COMPLIANCE AT THE OWNER'S EXPENSE."

SHEET NO.
SPR-1